October 31, 2025

TO: All Potential Bidders
SUBJECT: Well #35 Rehabilitation & Upgrades
Bid Ref. #26-022
Still Waters Engineering Project
A1202.014
Bid Opening Date & Time: **November 6, 2025 @ 2:30 p.m.**

ADDENDUM NO. 1
The items contained in this addendum are added to and/or deleted and become part of the specifications and bid documents for the above referenced Invitation to Bid.

ADD/DELETE:

BID DOCUMENTS – Plan Sheets E-3 and E-5

DELETE: We are omitting the originally issued plan sheets for E-3 and E-5

ADD: We are adding the revised plan sheets for E-3 and E-5. Please see attached.

All other terms and conditions remain unchanged. Acknowledge receipt of this addendum with your submittal. If you have any questions, feel free to contact me at (229) 431-3211.

City of Albany,

Joshua Williams
Joshua Williams, Procurement Manager

Cc: David Apperson, Utility Operations
Kurt Anthony, Utility Operations

SCHEMATIC DIAGRAM SYMBOLS:

- CONDUCTORS CONNECTED
- CONDUCTORS NOT CONNECTED
- CONNECTION POINT
- XX — TERMINAL POINT FOR OUTGOING CONDUCTORS, WITH IDENTIFICATION. "XX" DENOTES CONTRACTOR ASSIGNED.
- MCPXXX–XX, XXA — MAGNETIC-ONLY CIRCUIT BREAKER (MCP), WITH CURRENT RATING
- CBXXX–XX, XXA — CIRCUIT BREAKER, THERMAL-MAGNETIC UNLESS OTHERWISE NOTED, WITH FRAME SIZE AND TRIP RATING
- FUXXX–XX, XXA — FUSE WITH SIZE AND OPTIONAL IDENTIFICATION.
- DSXXX–XX, XXXA — DISCONNECT SWITCH, RATING OPTIONAL. 30 AMP, 600V RATED MINIMUM UNLESS OTHERWISE NOTED.
- FUXXX–XX — FUSE DISCONNECT SWITCH, RATING OPTIONAL. 30 AMP, 600V RATED MINIMUM UNLESS OTHERWISE NOTED.
- M–XXX — MOTOR (HP AS SHOWN, PHASES AS REQUIRED)
- MSR–XXX — MOTOR STARTER COIL
- M–XXX — MOTOR CONTACT
- OL–XXX — THERMAL MOTOR OVERLOAD
- XZXXX–XX — MOTOR SPACE HEATER
- LSXXX–XX, LSXXX–XX — LIMIT SWITCH NORMALLY CLOSED AND NORMALLY OPEN
- PSXXX–XX, PSXXX–XX — PRESSURE SWITCH NORMALLY CLOSED AND NORMALLY OPEN
- TSXXX–XX, TSXXX–XX — TEMPERATURE SWITCH NORMALLY CLOSED AND NORMALLY OPEN
- FSXXX–XX, FSXXX–XX — FLOW SWITCH NORMALLY CLOSED AND NORMALLY OPEN
- FLTXXX–XX, FLTXXX–XX — LEVEL SWITCH NORMALLY CLOSED AND NORMALLY OPEN
- PRSXXX–XX, PRSXXX–XX — PROXIMITY SWITCH NORMALLY CLOSED AND NORMALLY OPEN
- PCSXXX–XX, PCSXXX–XX — PULLCORD SWITCH NORMALLY CLOSED AND NORMALLY OPEN
- SVXXX–XX — SOLENOID VALVE
- PBXXX–XX, PBXXX–XX — MOMENTARY PUSHBUTTON NORMALLY CLOSED AND NORMALLY OPEN
- SSXXX–XX, SSXXX–XX (OX / OX) — SELECTOR SWITCH NORMALLY CLOSED AND NORMALLY OPEN; OX – LEFT POSITION OF HANDLE; XO – RIGHT POSITION OF HANDLE
- TRXXX–XX, TRXXX–XX (0–30 SEC) — TIME DELAY SWITCH NORMALLY CLOSED AND NORMALLY OPEN
- LTXXX–XX — PILOT LIGHT X = LENS COLOR: A = AMBER, B = BLUE, G = GREEN, R = RED, W = WHITE
- CRXXX–XX — CONTROL RELAY
- CRXXX–XX, CRXXX–XX — CONTROL RELAY CONTACT NORMALLY CLOSED AND NORMALLY OPEN
- ALXXX–XX — ALARM LIGHT
- AHXXX–XX — ALARM HORN
- TFRXXX–XX (H1, H2, X1, X2) — CONTROL POWER TRANSFORMER, PRIMARY AND SECONDARY VOLTAGE SHOWN. SIZE AS SHOWN OR SPECIFIED.
- CTXXX–XX (C.T.) — CURRENT TRANSFORMER. PRIMARY/SECONDARY TURNS RATIO AS SHOWN.

GROUNDING SYMBOLS:

- GROUND ROD, 3/4" x 10'-0", COPPERCLAD (UNLESS OTHERWISE NOTED)
- GROUND ROD AND TEST WELL
- COMPRESSION TYPE GROUNDING BOND TO MOTOR CASING OR EQUIPMENT
- EXOTHERMIC TYPE GROUNDING BOND TO CABLE OR CONCRETE REBAR OR RISER
- GROUNDING CONDUCTOR (CONCEALED), #4/0 AWG BARE COPPER (UNLESS OTHERWISE NOTED)
- GROUNDING CONDUCTOR (EXPOSED), #4/0 AWG INSULATED COPPER (UNLESS OTHERWISE NOTED)

ONE LINE DIAGRAM SYMBOLS:

- CB–XXX, AF, AT — LOW VOLTAGE POWER CIRCUIT BREAKER, DRAWOUT TYPE, FRAME SIZE (F) AND TRIP RATING (T) SHOWN
- CB–XXX — LOW VOLTAGE POWER MOLDED CASE CIRCUIT BREAKER, NON-DRAWOUT TYPE, WITH CURRENT RATING
- MCP–XXX — MAGNETIC-ONLY CIRCUIT BREAKER (MCP), DRAWOUT TYPE, WITH CURRENT RATING
- LIGHTNING ARRESTOR AND GROUND
- DS–XXX — DISCONNECT OR ISOLATING SWITCH: CONTINUOUS RATING SHOWN
- FS–XXX — FUSED SWITCH: FUSE AND SWITCH CONTINUOUS RATINGS SHOWN
- TFR–XXX — POWER TRANSFORMER: PRIMARY & SECONDARY VOLTAGES, XZ, SIZE SHOWN
- XS — CURRENT TRANSFORMER: RATIO SHOWN (3 INDICATES NO. OF CT'S); METER SWITCH, XS: AS – AMMETER SWITCH; VS – VOLTMETER SWITCH; FS – FREQUENCY SWITCH
- PT — POTENTIAL TRANSFORMER PRIMARY & SECONDARY VOLTAGES & WINDINGS SHOWN, (X) UNITS
- METER — METER: A – AMMETER; KWH – WATT-HOUR METER; F – FREQUENCY METER; TT – TOTAL (ELAPSED) TIME METER; VAR – VAR METER; V – VOLTMETER; W – WATTMETER
- FVNR SIZE X — FULL VOLTAGE, NON-REVERSING MAGNETIC MOTOR STARTER. NEMA SIZE INDICATED
- FVR SIZE X — FULL VOLTAGE, REVERSING MAGNETIC MOTOR STARTER. NEMA SIZE INDICATED
- VFD–XXX XXHP — VARIABLE FREQUENCY DRIVE. NEMA SIZE INDICATED
- RVSS–XXX XXHP — REDUCED VOLTAGE SOLID STATE DRIVE (SOFT START). NEMA SIZE INDICATED
- M–XXX — MOTOR (HP AS SHOWN, PHASES AS REQUIRED)
- GENERATOR RECEPTACLE
- ATS–XXX — AUTOMATIC TRANSFER SWITCH
- MTS–XXX — MANUAL TRANSFER SWITCH
- P–XXX–X — CABLE TAG: P – POWER CABLE; C – CONTROL CABLE; S – SHIELDED SIGNAL CABLE
- Gx — GENERATOR TAG: G – EQUIPMENT TO RUN OFF GENERATOR; X – STEP NUMBER FOR EQUIPMENT STARTING OFF THE GENERATOR

CIRCUIT AND RACEWAY SYMBOLS:

- RACEWAY OR WIRING SYSTEM ABOVE FLOOR LEVEL BELOW CEILING, EXPOSED. (UNLESS OTHERWISE NOTED)
- RACEWAY OR WIRING SYSTEM BELOW FLOOR LEVEL, ABOVE CEILING, HIDDEN, OR EXISTING CABLE/CONDUIT. (UNLESS OTHERWISE NOTED)
- ONE LINE DIAGRAM AND SCHEMATIC DIAGRAM FIELD WIRING. (UNLESS OTHERWISE NOTED)
- ONE LINE DIAGRAM EQUIPMENT ENCLOSURE. (UNLESS OTHERWISE NOTED)
- PBD A–1,3,5 — HOME RUN – SEE PANELBOARD SCHEDULE FOR CIRCUIT INFORMATION. EXAMPLE: HOME TO PANELBOARD PBD A, CIRCUITS 1, 3, AND 5

GENERAL ABBREVIATIONS:

AR	ALARM RELAY	M	MOTOR CONTACTOR
AS	AMMETER SELECTOR SWITCH	mA	MILLIAMPERE
A, AMP	AMP(S), AMPERE(S)	MAX	MAXIMUM
AC	ALTERNATING CURRENT	MCB	MAIN CIRCUIT BREAKER
AFF	ABOVE FINISHED FLOOR	MCC	MOTOR CONTROL CENTER
AHAP	AS HIGH AS POSSIBLE	MCP	MOTOR CONTROL PANEL/MOTOR CIRCUIT PROTECTOR
AIC	AMPS INTERRUPTING CAPACITY, SYMM.	MECH	MECHANICAL
AL	ALUMINUM	MFR	MANUFACTURE(R)
AT	AMPERE TRIP	MH	MANHOLE
AF	AMPERE FRAME	MIC	MICROPHONE
AUTO	AUTOMATIC	MIN	MINIMUM
AUX	AUXILIARY	MISC	MISCELLANEOUS
AWG	AMERICAN WIRE GAUGE	mM	MILLIMETER
BC	BARE COPPER CONDUCTOR	mV	MILLIVOLT
BKR	BREAKER	MCM	MILLI CIRCULAR MILLS
C	CONDUCTOR/CONTACTOR	MOP	MOTOR OPERATOR PANEL
CB	CIRCUIT BREAKER	MPR	MOTOR PROTECTION RELAY
CJB	CIRCUIT JUNCTION BOX	MSH	MOISTURE SENSOR HIGH
CKT	CIRCUIT	MTR	MOTOR
CLG	CEILING	MVS	MEDIUM VOLTAGE STARTER
CR	CONTROL RELAY	N/A	NOT APPLICABLE
CND	CONDUIT	NC	NORMALLY CLOSED
CONC	CONCRETE	NEUT,N	NEUTRAL
CS	CONTROL SWITCH	NF	NON-FUSED
CONT	CONTROL	NIC	NOT IN CONTRACT
CPT	CONTROL POWER TRANSFORMER	NO	NORMALLY OPEN
CT	CURRENT TRANSFORMER	NOM	NOMINAL
CU	COPPER	NP	NAMEPLATE
D	DIAMETER	NTS	NOT TO SCALE
DB	DUCT BANK	OC	ON CENTER
DC	DIRECT CURRENT	OD	OUTSIDE DIAMETER
DET	DETAIL	OH	OVERHEAD
DIAG	DIAGRAM	OL's	OVERLOADS
DPSH	DIFFERENTIAL PRESSURE SWITCH	OT	OIL TIGHT
DS	DISCONNECT SWITCH	P	POLE
DWG	DRAWING	PA	PUBLIC ADDRESS
EA	EACH	PB	PUSHBUTTON, PULLBOX
EC	ELECTRICAL CONTRACTOR	PE	PHOTO ELECTRIC CELL
EF	EXHAUST FAN	PF	POWER FACTOR
EL	ELEVATION	PH	PHASE
ELEC	ELECTRIC(AL)	PJB	POWER JUNCTION BOX
EMER	EMERGENCY	PLC	PROGRAMMABLE LOGIC CONTROLLER
ENCL	ENCLOSURE/ENCLOSED	PNL	PANEL
EP	EXPLOSION PROOF EQUIP.	PP	POWER PANEL
EX	EXISTING	PR	PAIR
FCP	FURNISHED WITH EQUIPMENT PANEL	PRI	PRIMARY
FDR	FEEDER	PS	PRESSURE SWITCH
FLA	FULL LOAD AMPS (NAMEPLATE DATA)	PT	POTENTIAL TRANSFORMER
FLC	FULL LOAD CURRENT (NEC TABLE)	PVC	POLYVINYL CHLORIDE
FPP	FIBER OPTIC DISTRIBUTION PANEL	PWR	POWER
FS	FLOW SWITCH	QSH	SHEAR PIN LIMIT SWITCH
FU	FUSE	RCPT	RECEPTACLE
FUT	FUTURE	RCT	REACTOR
FVNR	FULL VOLTAGE NON-REVERSING	REF	REFERENCE REQ'D REQUIRED
FVR	FULL VOLTAGE REVERSING	RMS	ROOT MEAN SQUARE
GALV	GALVANIZED	RTD	RESISTANCE TEMPERATURE DETECTOR
GEN	GENERATOR	RVSS	REDUCED VOLTAGE SOFT STARTER
GFR	GROUND FAULT RELAY	SCH	SCHEDULE
GRD	GROUND	SE	SPEED SENSOR
GRS	GALVANIZED RIGID STEEL	SEC	SECONDARY
H	HIGH	SEL	SELECTOR
HGT	HEIGHT	SER	SERVICE ENTRANCE RATED
HH	HANDHOLE	SPDT	SINGLE POLE DOUBLE THROW
HID	HIGH INTENSITY DISCHARGE	SPEC	SPECIFICATION
HP	HORSEPOWER	SPHTR	MOTOR SPACE HEATER
HS	HAND STATION (SWITCH)	SPKR	SPEAKER
HVAC	HEATING, VENTILATION AND AIR CONDITIONING	SS	STAINLESS STEEL
HZ	HERTZ (CYCLES PER SECOND)	SSL	SPEED SWITCH
HOA	HAND/OFF/AUTO SELECTOR SWITCH	SUB	SUBSTATION
HOR	HAND/OFF/REVERSE SELECTOR SWITCH	SW	SWITCH
HMH	HIGH VOLTAGE MANHOLE	SYMM	SYMMETRICAL
ID	INSIDE DIAMETER	SYS	SYSTEM
IMC	INDIVIDUAL MOTOR CONTROLLER	SV	SOLENOID OPERATED VALVE
INTLK	INTERLOCK	SPB	SIGNAL PULL BOX
INST	INSTANTANEOUS	TB	TERMINAL BOX
INSTR	INSTRUMENT	TEL	TELEPHONE
I/O	INPUT-OUTPUT	TEMP	TEMPERATURE
JB	JUNCTION BOX	TFR	TRANSFORMER
KV	KILOVOLT	TH	THERMOSTAT
KVA	KILOVOLT-AMPERE	TJB	TERMINAL JUNCTION BOX
KVAR	KILOVOLT-AMPERE REACTIVE	TSH	TEMPERATURE SENSOR HIGH
KW	KILOWATT	TV	TELEVISION
KWH	KILOWATT-HOUR	TYP	TYPICAL
KAIC	KILO AMPERE INTERRUPTING CURRENT	TR	TIMING RELAY
LOR	LOCAL/OFF/REMOTE	TVSS	TRANSIENT VOLTAGE SURGE SUPPRESSOR
L	LONG	TSP	TWISTED SHIELDED PAIR
LC	LIGHTING CONTACTOR	UG	UNDERGROUND
LCP	LOCAL CONTROL PANEL	UH	UNIT HEATER
LP	LIGHTING PANEL	UON	UNLESS OTHERWISE NOTED
LOS	LOCK-OUT STOP	V	VOLT
LSIG	LONG, SHORT, INSTANTANEOUS TRIP SETTING AND GROUND FAULT PROTECTION	VA	VOLT AMPERE
LSH	LEVEL SWITCH HIGH	VAR	VOLT AMPERE REACTIVE
LSHH	LEVEL SWITCH HIGH-HIGH ALARM	VFD	VARIABLE FREQUENCY DRIVE
LSL	LEVEL SWITCH LOW	VSH	VIBRATION SWITCH
LSLL	LEVEL SWITCH LOW-LOW ALARM	W	WATT, WIRE, WIDE
LSM	LEVEL SWITCH MIDDLE	W/	WITH
LSO	LIMIT SWITCH OPEN	W/O	WITHOUT
LSC	LIMIT SWITCH CLOSED	WE	WEIGHT LOAD CELL
LTG	LIGHTING	WIT	WEIGHT INDICATING TRANSMITTER
LV	LOW VOLTAGE	WP	WEATHERPROOF
		XL	WARNING HORN/LIGHT
		XT	ANEMOMETER
		ZS	POSITION (LIMIT) SWITCH
		ZSO	POSITION (LIMIT) SWITCH OPEN
		ZSC	POSITION (LIMIT) SWITCH CLOSED
		ZT	POSITION TRANSMITTER

GENERAL NOTES:

1. SCOPE:
   - A. FURNISH ALL LABOR, MATERIAL, EQUIPMENT AND TOOLS REQUIRED TO COMPLETE INSTALLATION OF THE ELECTRICAL SYSTEM INCLUDING BUT NOT LIMITED TO WIRING, BOXES, LIGHT FIXTURES, PANELS, SWITCHES, RECEPTACLES, DISCONNECTS, STARTERS, AND ALL OTHER WORK INDICATED ON THE DRAWINGS OR AS SPECIFIED HEREIN.
   - B. OBTAIN ALL PERMITS, INSPECTIONS, AND APPROVALS AS REQUIRED BY THE LOCAL AUTHORITIES HAVING JURISDICTION AND DELIVER CERTIFICATE OF APPROVAL TO THE GENERAL CONTRACTOR. ALL ASSOCIATED FEES SHALL BE PAID BY THE CONTRACTOR.
   - C. ALL MATERIALS AND EQUIPMENT OF THE ELECTRICAL SYSTEM NECESSARY FOR ITS PROPER AND SAFE OPERATION OR OTHERWISE REQUIRED BY CODE, BUT NOT SPECIFICALLY MENTIONED OR SHOWN ON THE DRAWINGS, SHALL BE FURNISHED AND INSTALLED WITHOUT ADDITIONAL CHARGE.
   - D. WORK SHALL BE INSTALLED IN ACCORDANCE WITH THE LATEST EDITION OF NATIONAL ELECTRICAL CODE, THE LATEST STANDARD BUILDING CODE, ANY OTHER LOCALLY ADOPTED CODES AND LOCAL AUTHORITIES HAVING JURISDICTION.
2. ALL SUBSTITUTIONS FOR EQUIPMENT AND MATERIAL SHALL BE SUBMITTED TO THE ENGINEER FOR REVIEW PRIOR TO PURCHASING.
3. THE CONTRACTOR SHALL COORDINATE ALL WORK WITH ALL OTHER TRADES. IT IS THE RESPONSIBILITY OF CONTRACTOR TO VERIFY THE ACTUAL LOCATION OF EQUIPMENT, DUCTWORK, PIPING, ETC. AND COORDINATED THE INSTALLATION ACCORDINGLY. THE EQUIPMENT WIRING SHALL INCLUDE ALL NECESSARY CABLES AND CONDUIT REQUIRED FOR THE PROPER AND SAFE EQUIPMENT OPERATION.
4. THE CONTRACTOR SHALL CONFIRM ALL DIMENSIONS AND DISTANCES IN THE FIELD. IN CASE OF DISCREPANCY, CONTRACTOR SHALL INCLUDE A MORE EXPENSIVE OPTION.
5. ALL MATERIALS SELECTION SHALL BE AS PER THE SCHEDULE SHOWN ON DWG. E-2, UNLESS NOTED OTHERWISE ON THE DRAWINGS.
6. ALL ITEMS DESIGNED TO BE REMOVED SHALL BECOME THE PROPERTY OF CONTRACTOR, WITH THE EXCEPTION OF THE ITEMS IDENTIFIED BY THE OWNER DURING THE CONSTRUCTION.

PLAN DRAWING SYMBOLS:

- MOTOR CONNECTION
- MOTOR STARTER, INDIVIDUAL — NOT LOCATED IN AN MCC OR SIMILAR GROUP ASSEMBLY
- COMBINATION MOTOR STARTER/DISCONNECT INDIVIDUAL — NOT LOCATED IN AN MCC OR SIMILAR GROUP ASSEMBLY
- DISCONNECT SWITCH. DISCONNECT SWITCHES ARE HEAVY DUTY, SINGLE THROW, WITH NEMA 4X ENCLOSURE UNLESS OTHERWISE NOTED. MOUNT AT 4'-6" TO CENTER OF DISCONNECT.
- FUSED DISCONNECT, NON-FUSED. PROVISION FOR CLASS R FUSES.
- FIELD INSTRUMENT CONNECTION
- START/STOP HAND STATION MOUNTED TO HANDRAIL (NEMA 4X UNLESS OTHERWISE NOTED)
- $x — 120V, 20A, 1P TOGGLE SWITCH: [BLANK] = 1P TOGGLE SWITCH; 2 = 2P TOGGLE SWITCH; 3 = 3P TOGGLE SWITCH; D = SLIDE DIMMER; M = MOTOR RATED; S = TOGGLE WITH OCCUPANCY SENSOR
- DUPLEX 120V RECEPTACLE, 120V, 20A, 1P. MOUNT 6" ABOVE COUNTER, DESK, OR CABINET.
- GFCI DUPLEX 120V RECEPTACLE, 120V, 20A, 1P. MOUNT 6" ABOVE COUNTER, DESK, OR CABINET.
- QUADRAPLEX 120V RECEPTACLE, 120V, 20A, 1P. MOUNT 6" ABOVE COUNTER, DESK, OR CABINET.
- TELEPHONE BOX. MOUNT 18" A.F.F., INSTALL A 1/2" CONDUIT FROM BOX TO 6" ABOVE CEILING. PROVIDE PULL CORD FOR FUTURE CONNECTIONS AS REQUIRED.
- ETHERNET CAT-6 BOX. MOUNT 18" A.F.F., INSTALL A 1/2" CONDUIT FROM BOX TO 6" ABOVE CEILING. PROVIDE PULL CORD FOR FUTURE CONNECTIONS AS REQUIRED.
- 60A, 480V, 3PH WELDING RECEPTACLE WITH INTERLOCKED 60A (NEMA 4X FUSED DISCONNECT SWITCH UNLESS OTHERWISE NOTED)
- JB — JUNCTION BOX
- RECESSED FLOOR JUNCTION BOX

ELECTRICAL LEGEND & NOTES

EDEC, INC.
4120 CHATTAHOOCHEE TRACE
SUITE A
DULUTH, GEORGIA 30097
TEL (770) 463-8885
EDEC — A SALAS O'BRIEN COMPANY

Revision	Date
A	08/13/25

STILL WATERS ENGINEERING
130 VETERINARY WAY, UNIT 2, LEESBURG, GA. 31763, 229.496.5700
WWW.STILLWATERSENG.COM

WELL No. 35 UPGRADES
FOR THE
CITY OF ALBANY UTILITIES DIVISION
DOUGHERTY COUNTY, GEORGIA

GEORGIA — DENIS VYSTROPOV — PROFESSIONAL ENGINEER

Project No. A1202.014	Date: AUG 2025
Scale: N.T.S.	Designed By: DV

SHEET #: E-1 OF 9 SHEETS

ELECTRICAL EQUIPMENT MATERIALS RATING

NO.	EQUIPMENT	INSTALLATION AREA AND DESIGN CRITERIA				
		INDOOR PROCESS (PIPING GALLERY, PUMPS ROOM, ETC.) ENVIRONMENT: CORROSIVE; DAMP	INDOOR CHEMICAL ROOM ENVIRONMENT: CORROSIVE; DAMP	OUTDOOR GENERAL AREAS ENVIRONMENT: CORROSIVE; WET	BELOW GRADE VAULTS (METERING VAULT, VALVE VAULT, ETC.) ENVIRONMENT: CORROSIVE; WET	UNDERGROUND AND DIRECT BURIED ENVIRONMENT: CORROSIVE; WET
1	RIGID CONDUITS	RMC – ALUMINUM	RC – PVC SCH. 80 WITH PLASTIC STRAPS	RMC – ALUMINUM	RMC – ALUMINUM	DIRECT BURIED – PVC 40; CONCRETE ENCASED – PVC 40.
2	FLEXIBLE CONDUITS	LIQUIDTIGHT FLEXIBLE METALLIC CONDUIT (LFMC)	LIQUIDTIGHT FLEXIBLE NONMETALLIC CONDUIT (LFNC)	LIQUIDTIGHT FLEXIBLE METALLIC CONDUIT (LFMC)	LIQUIDTIGHT FLEXIBLE METALLIC CONDUIT (LFMC)	N/A
3	CABLE TRAYS	LADDER TYPE – ALUMINUM	FIBERGLASS REINFORCED PLASTIC	LADDER TYPE – ALUMINUM	LADDER TYPE – ALUMINUM	N/A
4	JUNCTION BOXES	STEEL – NEMA 12	NEMA 4X, PLASTIC	STEEL – NEMA 3R	STEEL – NEMA 4	POLYMER CONCRETE
5	PULL BOXES	STEEL – NEMA 12	NEMA 4X, PLASTIC	STEEL – NEMA 3R	STEEL – NEMA 4	POLYMER CONCRETE
6	EQUIPMENT RACKS/SUPPORTS/HARDWARE	ALUMINUM	STAINLESS STEEL 316	ALUMINUM	ALUMINUM	STAINLESS STEEL 304
7	FASTENERS	ALUMINUM	STAINLESS STEEL 316	ALUMINUM	ALUMINUM	STAINLESS STEEL 304
8	SWITCHGEAR	NEMA 1	N/A	NEMA 3R	N/A	N/A
9	SWITCHBOARD	NEMA 1	N/A	NEMA 3R	N/A	N/A
10	MOTOR CONTROL CENTER	NEMA 1	N/A	NEMA 3R	N/A	N/A
11	PANELBOARDS	NEMA 12	NEMA 4X, TYPE 316 SS	NEMA 3R	N/A	N/A
12	DRY TYPE TRANSFORMERS	NEMA 3R	NEMA 4X, TYPE 316 SS	NEMA 3R	N/A	N/A
13	DISCONNECT SWITCHES	NEMA 12	NEMA 4X, TYPE 316 SS	NEMA 3R	NEMA 4	N/A
14	MOTOR STARTERS	NEMA 12	NEMA 4X, TYPE 316 SS	NEMA 3R	NEMA 4	N/A
15	CONTACTORS	NEMA 12	NEMA 4X, TYPE 316 SS	NEMA 3R	NEMA 4	N/A
16	CONTROL PANELS	NEMA 12	NEMA 4X, TYPE 316 SS	NEMA 3R	N/A	N/A
17	MOTOR HOUSING MINIMUM PROTECTION RATING	TEFC	TEFC	TEFC	TEFC	N/A
18	INSTRUMENTATION MINIMUM PROTECTION RATING	NEMA 4	NEMA 4X	NEMA 4	NEMA 4	NEMA 6P
19	VALVE ACTUATORS	NEMA 4	NEMA 4	NEMA 4	NEMA 6P	N/A
20	WIRING DEVICE BOXES	DIE-CAST ALUMINUM; WEATHERPROOF	PLASTIC; WEATHERPROOF	DIE-CAST ALUMINUM; WEATHERPROOF	DIE-CAST ALUMINUM; WEATHERPROOF	N/A
21	DEVICES COVER PLATES	DIE-CAST ALUMINUM; WEATHERPROOF	PLASTIC; WEATHERPROOF (WITH GASKET)	DIE-CAST ALUMINUM; WEATHERPROOF	DIE-CAST ALUMINUM; WEATHERPROOF	N/A
22	OUTLET BOX HOODS	ALUMINUM; WEATHERPROOF (WHILE-IN-USE COVER)	PLASTIC; WEATHERPROOF (WHILE-IN-USE COVER) (WITH GASKET)	ALUMINUM; WEATHERPROOF (WHILE-IN-USE COVER)	ALUMINUM; WEATHERPROOF (WHILE-IN-USE COVER)	N/A

CABLE TYPES REQUIREMENTS

	MATERIAL	SERVICE ENTRANCE	VFD MOTOR FEEDERS	POWER	CONTROL	SIGNAL
CABLE TYPES	COPPER, UNLESS NOTED OTHERWISE	XHHW, 600V	SHIELDED VFD CABLES, 1000V	THWN-2, 600V	THWN-2, 600V	SHIELDED TWISTED TYPE, 600V

NOTES:

1. POWER CABLES REQUIREMENTS:
   - 1.1. MINIMUM ALLOWED WIRE GAUGE: #12 AWG.
   - 1.2. MAXIMUM ALLOWED WIRE GAUGE: 800KCMIL.
   - 1.3. MAXIMUM MULTICONDUCTOR CABLES SIZE: #1 AWG.
   - 1.4. MAXIMUM SOLID CORE CABLES SIZE: #10 AWG.
2. CONTROL CABLES REQUIREMENTS:
   - 2.1. CABLES CONSTRUCTION TYPE: SINGLE CONDUCTOR.
   - 2.2. MINIMUM ALLOWED WIRE GAUGE: #14 AWG.
3. SIGNAL CABLES REQUIREMENTS:
   - 3.1. CABLES CONSTRUCTION TYPE: MULTICONDUCTOR CONDUCTOR WITH OVERALL SHIELD AND DRAIN WIRE.
   - 3.2. MINIMUM ALLOWED WIRE GAUGE: #16 AWG.
   - 3.3. MAXIMUM NUMBER OF PAIRS/TRIADS IN MULTI-PAIR/TRID CABLE: 2.

INSTALLATION REQUIREMENTS:

GENERAL:

1. ALL ELECTRICAL EQUIPMENT AND MATERIALS SHALL BE UL LISTED.
2. ALL ELECTRICAL EQUIPMENT AND MATERIALS INSTALLED OUTDOORS SHALL BE UV RESISTANT.
3. ALL ELECTRICAL EQUIPMENT AND MATERIALS OF THE SAME TYPE SHALL BE OF THE SAME MANUFACTURER AND MODEL LINE.
4. ALL FREESTANDING EQUIPMENT SHALL BE INSTALLED ON 4" HOUSEKEEPING PAD, ELEVATED ABOVE THE SURROUNDING SURFACE.
5. ALL ELECTRICAL, INSTRUMENTATION AND CONTROL SYSTEM COMPONENTS LOCATIONS SHALL BE ADJUSTED TO PROVIDE NEC REQUIRED WORKING CLEARANCES.
6. ALL ELECTRICAL EQUIPMENT INSTALLED OUTDOORS SHALL HAVE CONCRETE PADS EXTENDING 3FT IN FRONT OF THE EQUIPMENT.
7. CONTRACTOR SHALL ADJUST CIRCUIT BREAKER SIZES, CABLES AND CONDUITS FOR ELECTRICAL EQUIPMENT AT NO ADDITIONAL COST BASED ON THE ACTUAL ACCEPTED SHOP DRAWINGS.
8. CONTRACTOR SHALL CONFIRM ELECTRICAL EQUIPMENT DIMENSIONS PRIOR TO RELEASING FOR FABRICATION LOCATED IN THE AREAS WITH LIMITED AVAILABLE SPACE TO ENSURE PROPER EQUIPMENT INSTALLATION PROVIDING NEC REQUIRED WORKING CLEARANCES.
9. FOR NEW CONSTRUCTION, INSTALLATION AND/OR DEMOLITION THAT INTERRUPTS ANY POWER, CONTROL OR SIGNAL WIRING TO EXISTING EQUIPMENT OR DEVICES THAT SHALL REMAIN IN OPERATION. CONTRACTOR SHALL INCLUDE ALL REQUIRED BREAKERS, CABLES/CONDUITS AND/OR ANY OTHER EQUIPMENT AS REQUIRED TO KEEP THE EXISTING SYSTEM FUNCTIONAL.
10. ALL MOTORS USED WITH VARIABLE FREQUENCY DRIVES SHALL BE INVERTER DUTY RATED TYPE.
11. ALL OUTDOOR ENCLOSURES CABLES ENTRY POINTS SHALL BE IN THE BOTTOM OF THE ENCLOSURE. IN CASE OF INABILITY TO MAKE BOTTOM PENETRATION, SIDE CONNECTION WOULD BE ACCEPTABLE. ENCLOSURES TOP ENTRY ARE NOT ALLOWED.

POWER DISTRIBUTION AND CONDUITS INSTALLATION REQUIREMENTS:

1. ALL POWER DISTRIBUTION EQUIPMENT SHALL BE BY THE FOLLOWING MANUFACTURES: EATON, SCHNEIDER ELECTRIC, ABB, ALLEN-BRADLEY, SIEMENS OR APPROVED EQUAL.
2. ALL MOTOR STARTERS, VFD'S, RVSS'S SHALL BE BY THE FOLLOWING MANUFACTURES: EATON, SCHNEIDER ELECTRIC, ABB, ALLEN-BRADLEY, SIEMENS OR APPROVED EQUAL.
3. ALL CONDUITS ENDS SHALL BE FREE OF METAL SHAVINGS AND BE PROVIDED WITH FITTINGS WITH INSULATED BUSHING.
4. ALL EXPOSED CONDUITS SHALL BE MINIMUM OF 3/4". ALL BURIED CONDUIT SHALL BE MINIMUM OF 1".
5. ALL UNDERGROUND CONDUITS SHALL HAVE RIGID STEEL ELBOWS.
6. ALL METAL CONDUITS SHALL BE PROTECTED WITH A BITUMINOUS COATING WHEN INSTALLED UNDERGROUND OR WHEN IN CONTACT WITH CONCRETE.
7. CONTRACTOR IS RESPONSIBLE FOR COORDINATING ALL CABLES AND EQUIPMENT LUG SIZES. IN CASE THE CABLE IS OF A LARGER SIZE THAN THE EQUIPMENT LUG, CONTRACTOR SHALL PROVIDE THE REQUIRED CONNECTOR AT NO ADDITIONAL CHARGE TO OWNER.
8. CONTRACTOR SHALL PROVIDE PULL STRING AND PERMANENTLY ATTACHED IDENTIFICATION LABELS AT EACH CONDUIT END FOR ALL SPARE CONDUITS. EACH TAG SHALL INCLUDE CONDUIT NUMBER, SIZE AND DESTINATION POINT.
9. CONTRACTOR SHALL PROVIDE ALL REQUIRED PULL BOXES AND/OR CONDULETS TO MEET NEC ARTICLE 314 FOR CABLE PULLS.
10. ALL CABLES INSTALLED IN CABLE TRAYS SHALL BE TC RATED.
11. CONDUIT FITTING CONNECTION TYPES SHALL BE AS FOLLOWS:
    - 11.1. FOR RMC AND IMC CONDUITS – THREADED TYPE;
    - 11.2. FOR EMT CONDUITS – COMPRESSION TYPE.
12. RIGID CONDUIT CONNECTIONS TO ENCLOSURES SHALL BE MADE WITH MYERS HUBS.
13. ALL OPEN CONDUIT ENDS SHALL BE PROTECTED FROM ELEMENTS PENETRATION TO THE INSIDE THE CONDUIT WITH DUCT SEAL.
14. TO EQUIPMENT ENCLOSURES THAT ARE NOT SUITABLE FOR RIGID OR FLEXIBLE CONDUIT CONNECTION, THE CONTRACTOR SHALL PROVIDE A CORD GRIP AT THE CONDUIT END TO PROTECT THE FROM ELEMENTS PENETRATION TO THE INSIDE THE CONDUIT.
15. THE CONTRACTOR SHALL INSTALL EXPANSION COUPLINGS AS REQUIRED TO PREVENT CONDUIT DAMAGE DUE TO LONGITUDAL MOVEMENT AND/OR THERMAL EXPANSION.
16. THE CONTRACTOR SHALL INSTALL DEFLECTION COUPLINGS FOR CONDUITS RUNS THAT ARE SUBJECT TO ANGULAR AND PARALLEL MISALIGNMENT.
17. THE CONTRACTOR SHALL INSTALL DRAIN FITTING IN VERTICAL CONDUIT RUNS AT LOW POINTS IN CONDUIT SYSTEM TO PREVENT ACCUMULATION OF CONDENSATE ABOVE SEAL-OFF FITTINGS.
18. THE CONTRACTOR SHALL INSTALL DRAIN FITTINGS AT LOW POINTS OF CONDUIT RUN TO DRAIN ACCUMULATED CONDENSATE AND TO PROVIDE VENTILATION TO MINIMIZE CONDENSATION.
19. FOR OVERHEAD SERVICES THE CONTRACTOR SHALL INSTALL WEATHERED FITTINGS AS REQUIRED, FOR SERVICE CABLE INSTALLATION THROUGH THE ROOF, USE SERVICE ENTRANCE MAST KITS.
20. THE CONTRACTOR SHALL INSTALL GROUNDING BUSHING AS REQUIRED BY NEC, AS WELL AS FOR THE FOLLOWING CONDITIONS:
    - 20.1. FOR METALLIC RACEWAYS CONTAINING SERVICE CONDUCTORS
    - 20.2. FOR METALLIC RACEWAYS TERMINATED AT NON-METALLIC ENCLOSURES
    - 20.3. FOR METALLIC RACEWAYS TERMINATED ON RING KNOKOUTS REMAINING AND THE CIRCUIT EXCEEDING 250V TO GROUND NOMINAL
    - 20.4. FOR METALLIC RACEWAYS NOT TERMINATED AT ENCLOSURE

INSTRUMENTATION AND CONTROLS:

1. ALL FIELD MOUNTED INDICATING TRANSMITTERS SHALL BE PROVIDED WITH SUN/RAIN HOOD.
2. ALL CONTROL CABINETS INSTALLED OUTDOORS SHALL BE PROVIDED WITH SUN PROTECTING COVER OVER DISPLAYS TO AVOID DETERIORATION FROM UV EXPOSURE.

GROUNDING:

1. MAXIMUM DISTANCE BETWEEN DRIVEN GROUND RODS IS NOT TO EXCEED 50' UNLESS OTHERWISE NOTED.
2. ALL GROUNDING CONDUCTORS TO BE BARE, STRANDED, SOFT DRAWN, COPPER, SIZED AS INDICATED ON THE DESIGN DRAWINGS.
3. MAIN RING GROUND WIRE TO BE MAXIMUM 3' OUTSIDE FOUNDATIONS AND 2'-6" BELOW FINISH GRADE.
4. CONTRACTOR TO DETERMINE ACTUAL LOCATION OF ANY EQUIPMENT UTILIZING BONDS TO GROUNDING TAILS. CONTRACTOR TO LOCATE 1" PVC GROUNDING STUB-UPS IN ACCORDANCE WITH EQUIPMENT VENDOR INFORMATION OR DRAWING REQUIREMENTS.
5. FOR COMPRESSION APPLICATIONS, APPLY A COAT OF "NO-OXIDE" COMPOUND ONTO COPPER CABLE AND COMPRESSION CONNECTORS PRIOR TO CRIMPING CONNECTION OR USE PRE-FILLED CONNECTORS.
6. ALL GROUND CABLES STUBBING UP THROUGH CONCRETE SHALL STUB UP THRU PVC CONDUIT, SIZED PER PLAN DRAWINGS. PVC CONDUIT SHALL EXTEND A MINIMUM OF 6" ABOVE AND 6" BELOW THE CONCRETE.
7. PIGTAILS SHOULD BE INSTALLED THRU 1" PVC CONDUIT, 10' LONG U.N.O.
8. EXOTHERMIC WELDS SHALL BE UTILIZED IN UNDERGROUND INSTALLATIONS ONLY. ALL SUCH WELDS SHALL BE INSPECTED BY THE SITE ENGINEER REPRESENTATIVE PRIOR TO COVER.
9. ALL ABOVE GROUND GROUNDING CONNECTIONS SHALL EMPLOY PROPERLY RATED COMPRESSION CONNECTORS.
10. THE MAIN GROUNDING RING CONDUCTOR SHALL BE RUN AS MECHANICALLY CONTINUOUS AS POSSIBLE WITH A MINIMUM OF CUTS AND SPLICES.

ELECTRICAL MATERIALS SCHEDULE

EDEC
A SALAS O'BRIEN COMPANY
EDEC, INC.
4120 CHATTAHOOCHEE TRACE
SUITE A
DULUTH, GEORGIA 30097
TEL. (770) 483.8885

Revision	Date
A	08/13/25

STILL WATERS
ENGINEERING
130 VETERINARY WAY, UNIT 2, LEESBURG, GA, 31763, 229.496.5700
WWW.STILLWATERSENG.COM

WELL No. 35 UPGRADES
FOR THE
CITY OF ALBANY UTILITIES DIVISION
DOUGHERTY COUNTY, GEORGIA

GEORGIA
DENIS VYSTROPOV
PROFESSIONAL ENGINEER

Project No.	Date:
A1202.014	AUG 2025
Scale: N.T.S.	Designed By: DV

SHEET #: E-2
OF 9 SHEETS

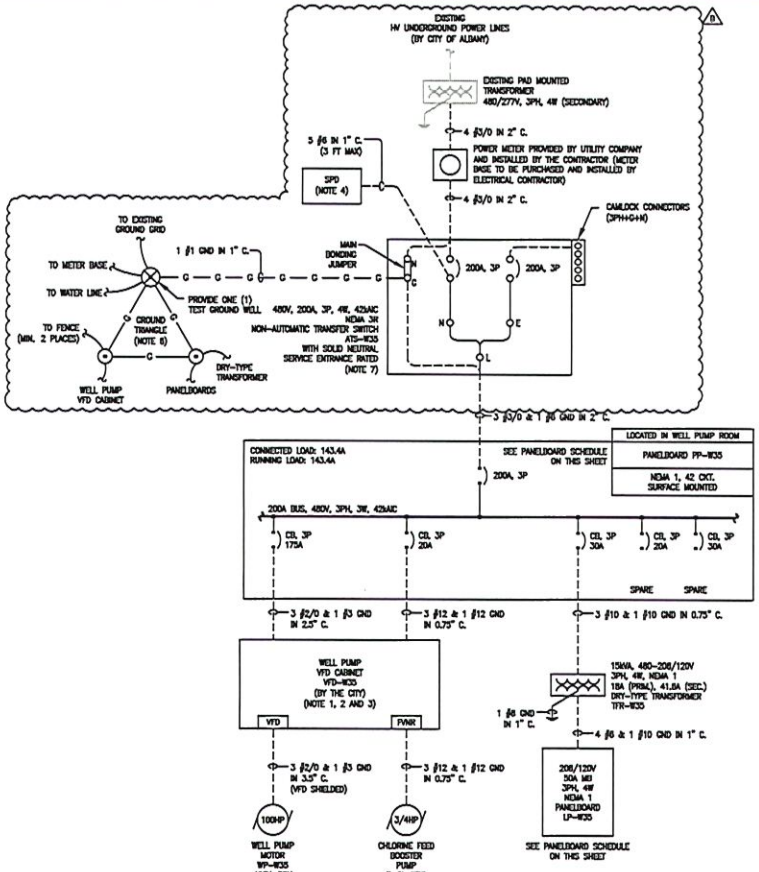

1 WELL #35 – ONE LINE DIAGRAM

PANELBOARD	PP-W35										(LOCATED IN WELL PUMP ROOM)
VOLTAGE (L-N):	—					ENCLOSURE TYPE:		NEMA 1			
VOLTAGE (L-L):	480V					MOUNTING:		SURFACE			
PHASE, WIRES:	3 ϕ, 3 W					AIC RATING (A):		42,000 AIC			
MINIMUM BUS CAPACITY (A):	200A					NOTES:					
MAIN O.C. DEVICE (A):	200A, 3P MAIN BREAKER										
CKT NO	DESCRIPTION	TRIP AMPS	POLE	PHASE LOADS (AMP) A		B		C		POLE	TRIP AMPS	DESCRIPTION	CKT NO
1	WELL PUMP VFD CABINET (VFD-W35)	175	3	124.0	1.4					3	20	WELL PUMP VFD CABINET (VFD-W35)	2
3	(WELL PUMP)					124.0	1.4					(CHLORINE PUMP)	4
5								124.0	1.4				6
7	TRANSFORMER (TFR-W35)	30	3	18.0	0.0					3	20	SPARE	8
9						18.0	0.0						10
11								18.0	0.0				12
13	SPARE	30	3	0.0	0.0							SPACE	14
15						0.0	0.0					SPACE	16
17								0.0	0.0			SPACE	18
19	SPACE			0.0	0.0							SPACE	20
21	SPACE					0.0	0.0					SPACE	22
23	SPACE							0.0	0.0			SPACE	24
25	SPACE			0.0	0.0							SPACE	26
27	SPACE					0.0	0.0					SPACE	28
29	SPACE							0.0	0.0			SPACE	30
31	SPACE			0.0	0.0							SPACE	32
33	SPACE					0.0	0.0					SPACE	34
35	SPACE							0.0	0.0			SPACE	36
37	SPACE			0.0	0.0							SPACE	38
39	SPACE					0.0	0.0					SPACE	40
41	SPACE							0.0	0.0			SPACE	42
USE THE FOLLOWING CONDUCTORS FOR PANELBOARD CIRCUITS: 20A – #12AWG; 30A – #10AWG; 175A – #2/0 AWG				CONNECTED LOAD PHASE TOTALS (AMP)									
				143.4		143.4		143.4					

2 PP-W35 – PANELBOARD SCHEDULE

PANELBOARD	LP-W35										(LOCATED IN WELL PUMP ROOM)
VOLTAGE (L-N):	120V					ENCLOSURE TYPE:		NEMA 1			
VOLTAGE (L-L):	208V					MOUNTING:		SURFACE			
PHASE, WIRES:	3 ϕ, 4 W					AIC RATING (A):		10,000 AIC			
MINIMUM BUS CAPACITY (A):	100A					NOTES:					
MAIN O.C. DEVICE (A):	30A, 3P MAIN BREAKER										
CKT NO	DESCRIPTION	TRIP AMPS	POLE	PHASE LOADS (AMP) A		B		C		POLE	TRIP AMPS	DESCRIPTION	CKT NO
1	WELL PUMP ROOM EXHAUST FAN (EF-W35-3)	20	1	2.8	2.8					1	20	CHLORINE ROOM EXHAUST FAN (EF-W35-2)	2
3	FLUORIDE ROOM EXHAUST FAN (EF-W35-1)	20	1			2.8	5.0			1	20	FLUORIDE METERING PUMP	4
5	CHLORINE GAS DETECTOR (AIT-CL-W35)	20	1					0.5	0.5	1	20	FLOW INDICATING TRANSMITTER (FIT-W35)	6
7	PLC CABINET (PLC-W35)	20	1	1.0	1.0					1	20	HIGH/LOW CHLORINE VACUUM ALARM SWITCH	8
9	CHLORINE ROOM RECEPTACLES	20	1			3.0	3.0			1	20	FLUORIDE ROOM RECEPTACLES	10
11	WELL PUMP ROOM LIGHTING	20	1					2.1	0.7	1	20	CHLORINE ROOM LIGHTING	12
13	FLUORIDE ROOM LIGHTING	20	1	0.7	1.0					1	20	SAFETY SHOWER ALARM PANEL	14
15	SAFETY SHOWER HEAT TRACE	20(*)	1			3.0	6.0			1	20	WELL PUMP ROOM RECEPTACLES	16
17	EXTERIOR LIGHTING	20	1					1.2	2.0	1	20	WELL PUMP VFD CABINET VFD-W35 (CONTROL POWER)	18
19	SPARE	20	2	0.0	1.0					1	20	CHLORINE CYLINDERS SCALE TRANSMITTER (WIT-CL-W35)	20
21						7.2	1.0			1	20	FLUORIDE TANK SCALE TRANSMITTER (WIT-FL-W35)	22
23	UNIT HEATER (UH-W35-1)	20	2					7.2	1.0	1	20	EXISTING SECURITY LIGHT	24
25				7.2	0.0					1	20	SPARE	26
27	SPACE					0.0	0.0					SPACE	28
29	SPACE							0.0	0.0			SPACE	30
31	SPACE			0.0	0.0							SPACE	32
33	SPACE					0.0	0.0					SPACE	34
35	SPACE							0.0	0.0			SPACE	36
37	SPACE			0.0	0.0							SPACE	38
39	SPACE					0.0	0.0					SPACE	40
41	SPACE							0.0	0.0			SPACE	42
USE THE FOLLOWING CONDUCTORS FOR PANELBOARD CIRCUITS: 20A – #12AWG;				CONNECTED LOAD PHASE TOTALS (AMP)						(*) – 30mA, EGFP CIRCUIT BREAKER			
				17.5		31.0		15.2					

3 LP-W35 – PANELBOARD SCHEDULE

NOTES:

1. WELL PUMP VFD CABINET SHALL BE SUPPLIED BY THE CITY AND INSTALLED BY CONTRACTOR.
2. THE CONTRACTOR SHALL PROVIDE AND INSTALL A WARNING LABEL ON THE VFD CABINET READING: "DISCONNECT ALL POWER BEFORE SERVICING. MULTIPLE POWER SOURCES MAY BE PRESENT".
3. THE CONTRACTOR SHALL PROVIDE A SHELF SPARE VFD TO THE CITY, MANUFACTURED BY SIEMENS, SINAMICS G120X SERIES, RATED FOR 100HP, 480V, 3PH MOTOR COORDINATE THE EXACT VFD MODEL NUMBER, WITH THE CITY.
4. THE CONTRACTOR SHALL PROVIDE SURGE PROTECTION DEVICE (SPD) IN NEMA 4 ENCLOSURE. SPD SHALL BE EATON CAT#: SPD-160-480Y-3-0 WITH INTEGRAL DISCONNECT SWITCH OR APPROVED EQUAL.
5. THE CONTRACTOR SHALL PERFORM ALL THE REQUIRED DEMOLITION WORK PRIOR TO THE NEW EQUIPMENT INSTALLATION. SEE DWG. E-4 FOR MORE DETAILS. CONTRACTOR SHALL COORDINATE ALL THE REQUIRED POWER OUTAGES WITH THE CITY.
6. THE CONTRACTOR SHALL PROVIDE AND INSTALL A COMPLETE GROUND GRID AND MAKE CONNECTIONS AS SHOWN ON ELECTRICAL PLANS. GRID SHALL CONSIST OF #1 AWG BARE COPPER GROUND CONDUCTOR, 3/4" DIAMETER x 10'-0" GROUND RODS AND CADWELD CONNECTIONS TO GROUND RODS.
7. THE CONTRACTOR SHALL PROVIDE AND INSTALL A NON-AUTOMATIC TRANSFER SWITCH:
   MANUFACTURER: THOMSON POWER SYSTEMS.
   DESCRIPTION: NON-AUTOMATIC, SER, 200AMP, 480V, 3 POLE, OPEN TRANSITION, NEMA 3R, 42kAIC.
   ACCESSORIES: BUILT-IN QUICK CONNECT TERMINALS FOR GENERATOR CONNECTION.

ONE LINE DIAGRAM

EDEC
A SALAS O'BRIEN COMPANY
EDEC, INC.
4120 CHATTAHOOCHEE TRACE
SUITE A
DULUTH, GEORGIA 30097
TEL (770) 465-8885

Revision	Date
A	08/13/25
B	10/28/25

STILL WATERS ENGINEERING
320 VETERANS WAY, UNIT 2 LEESBURG, GA 31763 229.435.5700
WWW.STILLWATERSENG.COM

WELL No. 35 UPGRADES
FOR THE
CITY OF ALBANY UTILITIES DIVISION
DOUGHERTY COUNTY, GEORGIA

GEORGIA REGISTERED PROFESSIONAL ENGINEER DENIS VYSTROPOV

Project No.	Date:
A1202.014	AUG 2025
Scale: N.T.S.	Designed By: DV

SHEET #: E-3
OF 9 SHEETS

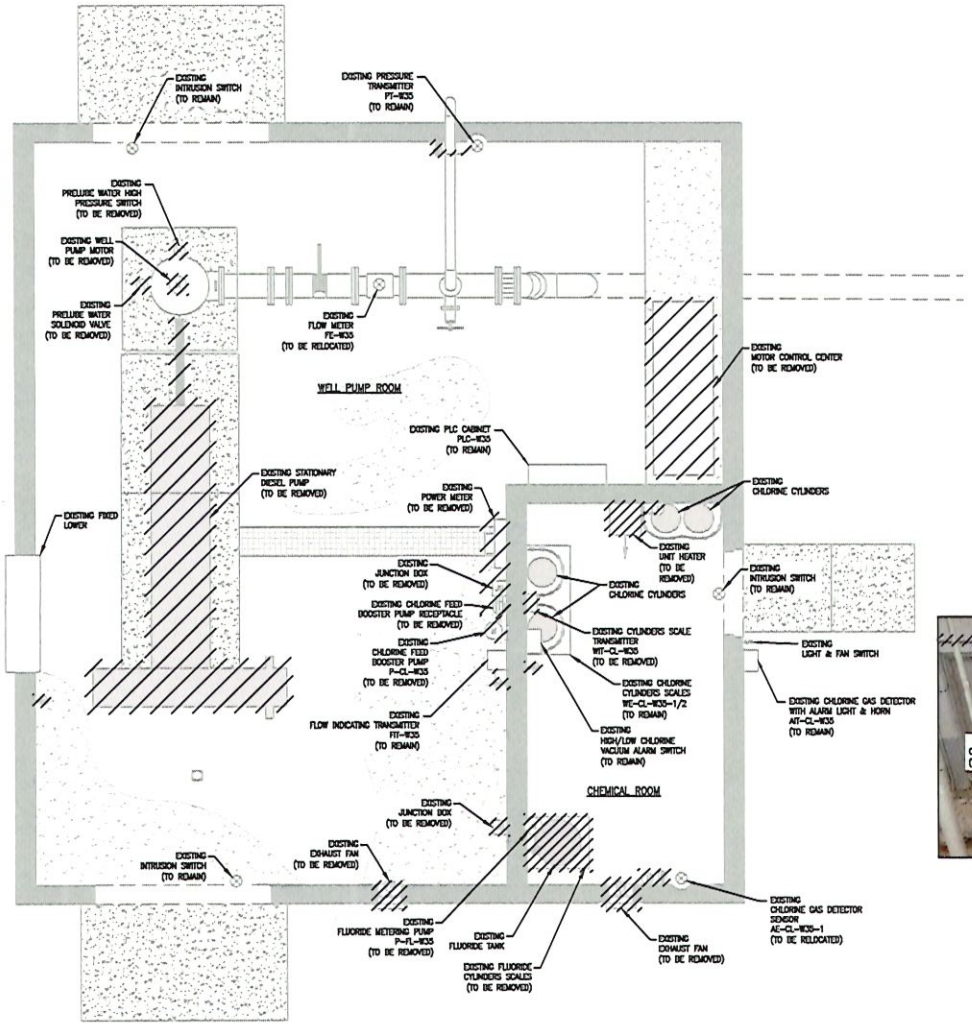

1 WELL PUMP BUILDING #35 (DEMOLITION SCOPE)
SCALE: 1/2" = 1'-0"

GRAPHIC SCALE
(IN FEET)
1/2 inch = 1 ft.

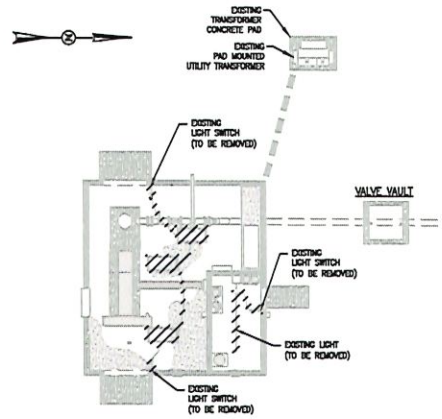

2 WELL PUMP BUILDING OVERALL LIGHTING & POWER PLAN
SCALE: 1/8" = 1'-0"

GRAPHIC SCALE
(IN FEET)
1/8 inch = 1 ft.

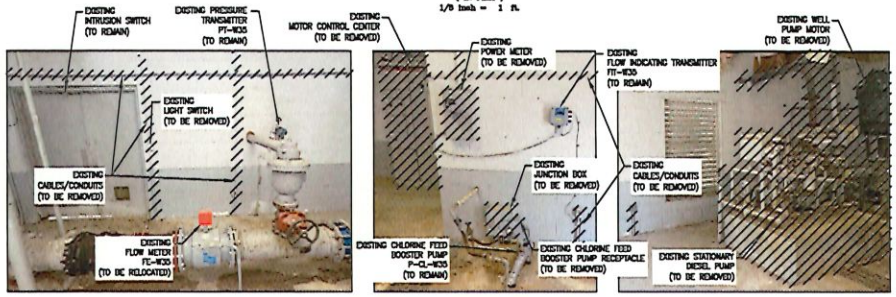

3 WELL PUMP BUILDING #35 – WELL PUMP ROOM
(DEMOLITION SCOPE)

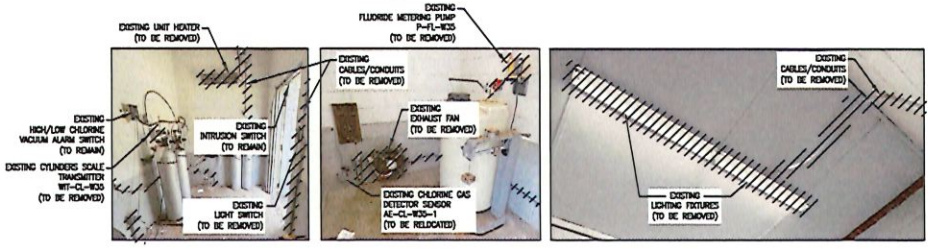

4 WELL PUMP BUILDING #35 – CHEMICAL ROOM
(DEMOLITION SCOPE)

NOTES:

1. THE CONTRACTOR SHALL REMOVE ALL EXISTING ELECTRICAL EQUIPMENT AS INDICATED (INCLUDING ALL LIGHTING FIXTURES, RECEPTACLES, SWITCHES, ETC.) WITH CABLES AND CONDUITS INSIDE THE WELL PUMP BUILDING. FOR DEVICES SPECIFIED TO REMAIN IN PLACE, THE CONTRACTOR SHALL KEEP THE EXISTING CABLES UNLESS SPECIFIED OTHERWISE. THE EXISTING CABLES SHALL BE INSTALLED IN NEW CONDUITS FOR PROPER PROTECTION.

LEGEND:

- EQUIPMENT TO BE DEMOLISHED

WELL PUMP HOUSE ELECTRICAL PLAN - DEMOLITION

EDEC
A SALAS O'BRIEN COMPANY

EDEC, INC.
4120 CHATTAHOOCHEE TRACE
SUITE A
DULUTH, GEORGIA 30097
TEL. (770) 495-8485

Revision	Date
A	08/13/25

STILL WATERS ENGINEERING
139 VETERANS RD4 UNIT 2 LEESBURG, CA 31763 229.436.5720
WWW.STILLWATERSENG.COM

WELL No. 35 UPGRADES
FOR THE
CITY OF ALBANY UTILITIES DIVISION
DOUGHERTY COUNTY, GEORGIA

GEORGIA REGISTERED PROFESSIONAL ENGINEER DENIS VYSTROPOV

Project No. A1202.014	Date: AUG 2025
Scale: AS SHOWN	Designed By: DV

SHEET #: E-4
OF 9 SHEETS

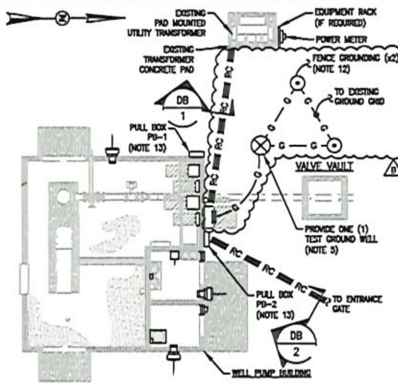

1 WELL PUMP BUILDING #35 OVERALL POWER PLAN
SCALE: 1/8" = 1'-0"

GRAPHIC SCALE
(IN FEET)
1/8 inch = 1 ft.

NOTES:

1. THE CONTRACTOR SHALL COORDINATE ROUTING OF ALL ELECTRICAL CONDUITS WITH OTHER UTILITIES TO AVOID CONFLICTS AND ADJUST AS NEEDED.
2. THE CONTRACTOR SHALL PROVIDE AND INSTALL A RADIANT HEATER BY AITKEN PRODUCTS, INC, MODEL #: SOHL 189 RATED FOR 208V, 1PH, 1800W WITH CORROSION RESISTANT THERMOSTAT AT THE LOCATIONS SHOWN.
3. THE CONTRACTOR SHALL CONNECT WELL PUMP STEEL BASE TO THE GROUND GRID WITH #1 BASE COPPER CONDUCTOR.
4. THE CONTRACTOR SHALL COORDINATE ACTUAL UTILITY TRANSFORMER LOCATION IN THE FIELD AND ADJUST SECONDARY CABLES/CONDUITS ROUTING ACCORDINGLY. UTILITY COMPANY SHALL PROVIDE AND INSTALL HIGH VOLTAGE PRIMARIES FROM POINT OF SERVICE TO NEW TRANSFORMER.
5. THE CONTRACTOR SHALL PROVIDE A GROUND GRID CONSISTING OF 3/4" DIA. x 10'-0" LONG COPPER CLAD GROUND RODS. THE RODS SHALL BE DRIVEN IN GROUND CONNECTED TOGETHER WITH #1 AWG BARE STRANDED COPPER CONDUCTORS. PROVIDE A GROUND WELL FOR ONE ROD. SEE DETAIL "B" AND "C" ON DWG. E-9 FOR GROUND WELL INSTALLATION DETAILS.
6. THE CONTRACTOR SHALL PROVIDE AND INSTALL 16"X16" MOTORIZED LOUVERS IN PLACE SHOWN ON THIS DRAWING. NEW LOUVERS SHALL BE CORROSION RESISTANT RATED GREENHECK MODEL#: ECD-601 OR APPROVED EQUAL. REFER TO LOUVERS SCHEDULE BELOW FOR ADDITIONAL DETAILS. SEE DETAIL "3" ON THIS SHEET FOR FAN AND LOUVER WIRING DIAGRAM.
7. THE CONTRACTOR SHALL COORDINATE THE ELECTRICAL EQUIPMENT INSTALLATION IN THE FILED TO MEET NEC WORKING CLEARANCE REQUIREMENTS. THE CONTRACTOR SHALL ADJUST INSTALLATION ACCORDINGLY IN THE FIELD AT NO ADDITIONAL COST TO THE OWNER.
8. THE CONTRACTOR SHALL PROVIDE AND INSTALL A CONDUIT TO REROUTE EXISTING INTRUSION SWITCH WIRING TO THE EXISTING PLC CABINET (PLC-W35). ROUTE THE CONDUIT IN A SUCH WAY, SO THE EXISTING WIRING IS LONG ENOUGH TO REACH THE PLC PANEL WITHOUT SPLICING.
9. THE CONTRACTOR SHALL PROVIDE AND INSTALL INTRUSION SWITCH AND CONNECT TO THE EXISTING PLC CABINET. THE SWITCH SHALL BE BY BANNER, MODEL OS18VP6D08, INCLUDING VENDOR SUPPLIED CABLE LONG ENOUGH TO REACH PLC CABINET WITHOUT SPLICING. THE WIRING SHALL BE INSTALLED IN 0.75" CONDUIT. ALL SOFTWARE, HARDWARE AND PROGRAMMING MODIFICATIONS TO THE PLC SHALL BE BY THE CITY.
10. ALL OUTDOOR TOGGLE SWITCHES SHALL BE WEATHER PROOF TYPE.
11. THE CONTRACTOR SHALL PROVIDE AND INSTALL THREE (3) COMBINATION MOTOR STARTERS FOR EXHAUST FANS OPERATION. SEE DETAIL "3" ON THIS SHEET FOR SCHEMATIC WIRING DIAGRAM.
12. THE CONTRACTOR SHALL GROUND FENCE AT TWO (2) PLACES AS REQUIRED BY NEC ARTICLE 250.194
13. THE CONTRACTOR SHALL PROVIDE AND INSTALL A NEMA 3R PULL BOX ADEQUATELY SIZED FOR ASSOCIATED CABLES AND CONDUITS.
14. ONLY MAJOR UNDERGROUND CONDUITS ARE SHOWN FOR CLARITY. THE CONTRACTOR SHALL COORDINATE ALL UNDERGROUND CONDUIT RUNS WITH OTHER UNDERGROUND UTILITIES. DUCTBANKS UNDER THE ROAD AND UTILITY TRANSFORMER DUCTBANK SHALL BE CONCRETE ENCASED. SEE DETAIL "D" ON DWG. E-9.

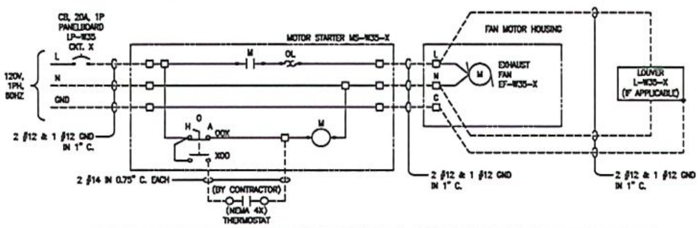

UNDERGROUND DUCTBANKS:

DB-1
1 - 2" C. (480/277V POWER FROM UTILITY TRANSFORMER)

DB-2
1 - 1" C. (RESERVED FOR FUTURE SECURITY SENSOR AT ENTRANCE GATE)

#	EXHAUST FAN	LOUVER	MANUAL MOTOR STARTER	ENCLOSURE TYPE	PANELBOARD, LP-W33	ROOM
1	EF-W35-1	L-W35-1	MS-W35-1	NEMA 3R	CKT. 3	FLUORIDE
2	EF-W35-2	L-W35-2	MS-W35-2	NEMA 3R	CKT. 2	CHLORINE
3	EF-W35-3	FIXED (WALL MOUNTED)	MS-W35-3	NEMA 1	CKT. 1	WELL PUMP

NOTES:

1. THE CONTRACTOR SHALL FURNISH AND INSTALL ENCLOSED MOTOR STARTER WHICH INCLUDES ALL NECESSARY POWER AND CONTROLS COMPONENTS INCLUDING, BUT NOT LIMITED TO THE FOLLOWING:
   A. CABINET SCCR SHALL BE 10KAIC MINIMUM.
   B. FULL VOLTAGE NON-REVERSING (FVNR) IEC TYPE NON-COMBINATION MOTOR STARTER, RATED FOR 1HP MOTOR.
   C. SELECTOR SWITCHES:
      C.A. HOA SWITCH.
   D. CABINET SHALL INCLUDE ALL NECESSARY COMPONENTS FOR EQUIPMENT SAFE AND RELIABLE OPERATION.

   THE CABINET SHALL BE MANUFACTURED BY EATON, SCHNEIDER ELECTRIC, ALLEN-BRADLEY, ABB, SIEMENS OR APPROVED EQUAL MANUFACTURER. THE CABINET SHALL BE UL LISTED AND LABELED. CONTRACTOR SHALL SUBMIT DETAILED WIRING DIAGRAM AND BOM FOR THE CONTROL PANEL TO ENGINEER FOR APPROVAL, PRIOR TO FABRICATION.

EXHAUST FAN SCHEDULE

MARK	CFM	DRIVE TYPE	MOTOR WATTS/HP	MAX FAN RPM	POWER/PHASE	LAY-OUT BASIS: MASTER FLOW	NOTES
EF-W35-1	1,600	DIRECT	140 / 1/9HP	1185	115/1	EDVBHT	1, 2, 3, 5
EF-W35-2	1,600	DIRECT	140 / 1/9HP	1185	115/1	EDVBHT	1, 2, 3, 5
EF-W35-3	1,600	DIRECT	140 / 1/9HP	1185	115/1	EDVBHT	2, 4, 5

NOTES:

1. VERIFY ELECTRIC POWER REQUIREMENTS WITH ELECTRICAL PLANS, WHICH TAKE PRECEDENCE OVER THIS INFORMATION. BOTTOM OF FAN AT 12" AFF. COORDINATE EXACT ELEVATION WITH ARCHITECT.
2. CENTRIFUGAL WALL MOUNT FAN. PROVIDE WALL MOUNTING BRACKET, GRAVITY SHUTTER WITH BUG SCREEN, EC MOTOR.
3. FAN SHALL BE CONTROLLED BY A 120V, 20A, 1PH MOTOR STARTER LOCATED ON EXTERIOR WALL OF THE ROOM.
4. VERIFY ELECTRIC POWER REQUIREMENTS WITH ELECTRICAL PLANS, WHICH TAKE PRECEDENCE OVER THIS INFORMATION. BOTTOM OF FAN AT 10 FT AFF.
5. FAN SHALL BE CONTROLLED BY CORROSION RESISTANT THERMOSTAT. THERMOSTAT SHALL BE 120V, SPDT IN NEMA 4X HOUSING, CHROMOLOX MODEL WCRT-100 OR EQUAL.

LOUVERS SCHEDULE

MARK	SIZE W X H (INCHES)	MIN FREE AREA (SQ. FT.)	MAXIMUM PRESS. DROP (IN. W.G.)	MOTOR OPERATOR	LAY-OUT BASIS: GREENHECK	NOTES
L-W35-1	16"X16"	0.62	0.08	YES	GREENHECK ECD-601	1, 2, 3
L-W35-2	16"X16"	0.62	0.08	YES	GREENHECK ECD-601	1, 2, 3

NOTES:

1. INSTALL LOUVER AS HIGH AS POSSIBLE, MAINTAINING - 12" CLEARANCE TO THE CEILING.
2. COMBINATION LOUVER/DAMPER ASSEMBLY. PROVIDE MANUFACTURER'S ELECTRIC MOTOR ACTUATORS BELMO, SEMANS OCD WITH 6" PROJECTION. INTERLOCK DAMPER TO OPEN WITH EACH LOUVER. PROVIDE BIRD AND INSECT SCREEN.
3. STATIONARY EXTRUDED ALUMINUM LOUVER. PROVIDE CORROSION RESISTANCE KYNER FINISH. PROVIDE BIRD AND INSECT SCREEN. COORDINATE COLOR WITH HE CITY (PROVIDE COLOR SAMPLES WITH SUBMITTAL).

3 EXHAUST FAN AND LOUVER WIRING DIAGRAM

LEGEND:
RC RC - REINFORCED CONCRETE ENCASED UNDERGROUND DUCTBANK

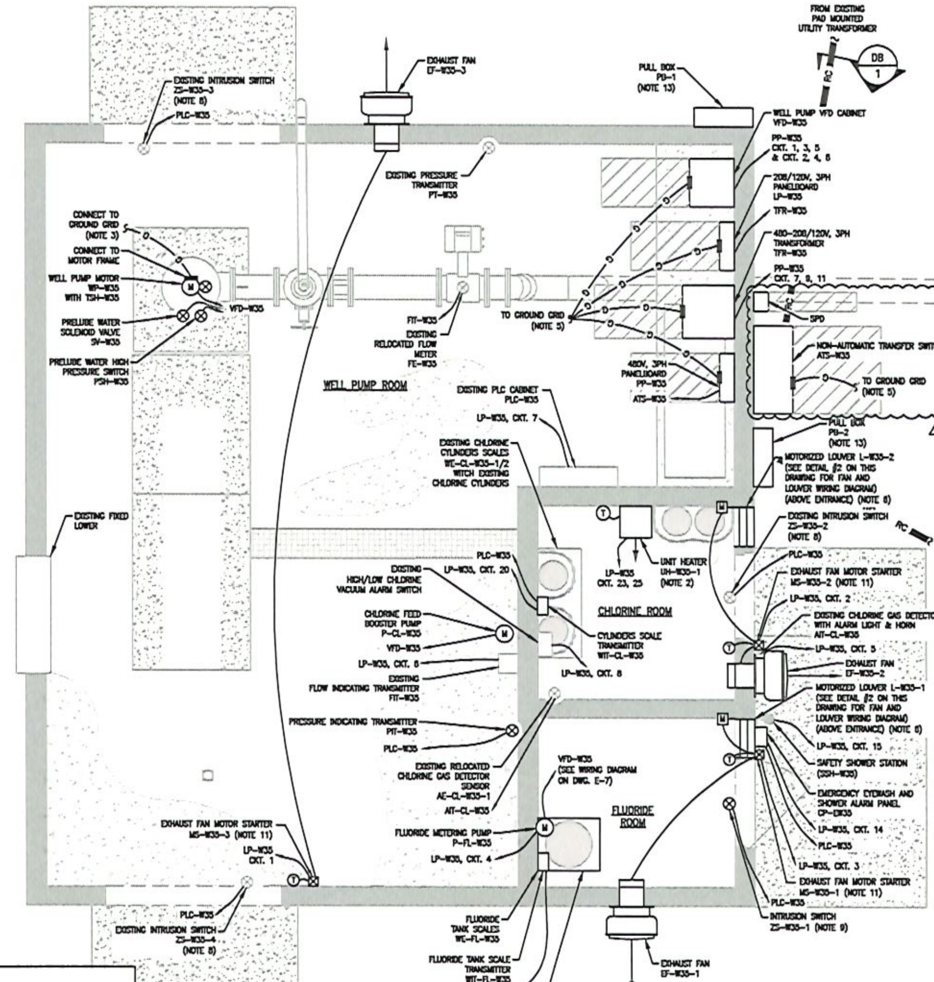

2 WELL PUMP BUILDING #35 POWER PLAN
SCALE: 1/2" = 1'-0"

GRAPHIC SCALE
(IN FEET)
1/2 inch = 1 ft.

WELL PUMP HOUSE ELECTRICAL PLAN

EDEC, INC.
4120 CHATTAHOOCHEE TRACE
SUITE A
DULUTH, GEORGIA 30097
TEL. (770) 493-8885
EDEC
A BALAS O'BRIEN COMPANY

Revision	Date
A	08/13/25
B	10/28/25

STILL WATERS
ENGINEERING
130 VETERINARY WAY, UNIT 2, LEESBURG, GA, 31763, 229.496.5700
WWW.STILLWATERSENG.COM

WELL No. 35 UPGRADES
FOR THE
CITY OF ALBANY UTILITIES DIVISION
DOUGHERTY COUNTY, GEORGIA

GEORGIA REGISTERED PROFESSIONAL ENGINEER DENIS VYSTROPOV

Project No.	Date:
A1202.014	AUG 2025
Scale: AS SHOWN	Designed By: DV

SHEET #:
E-5
OF 9 SHEETS

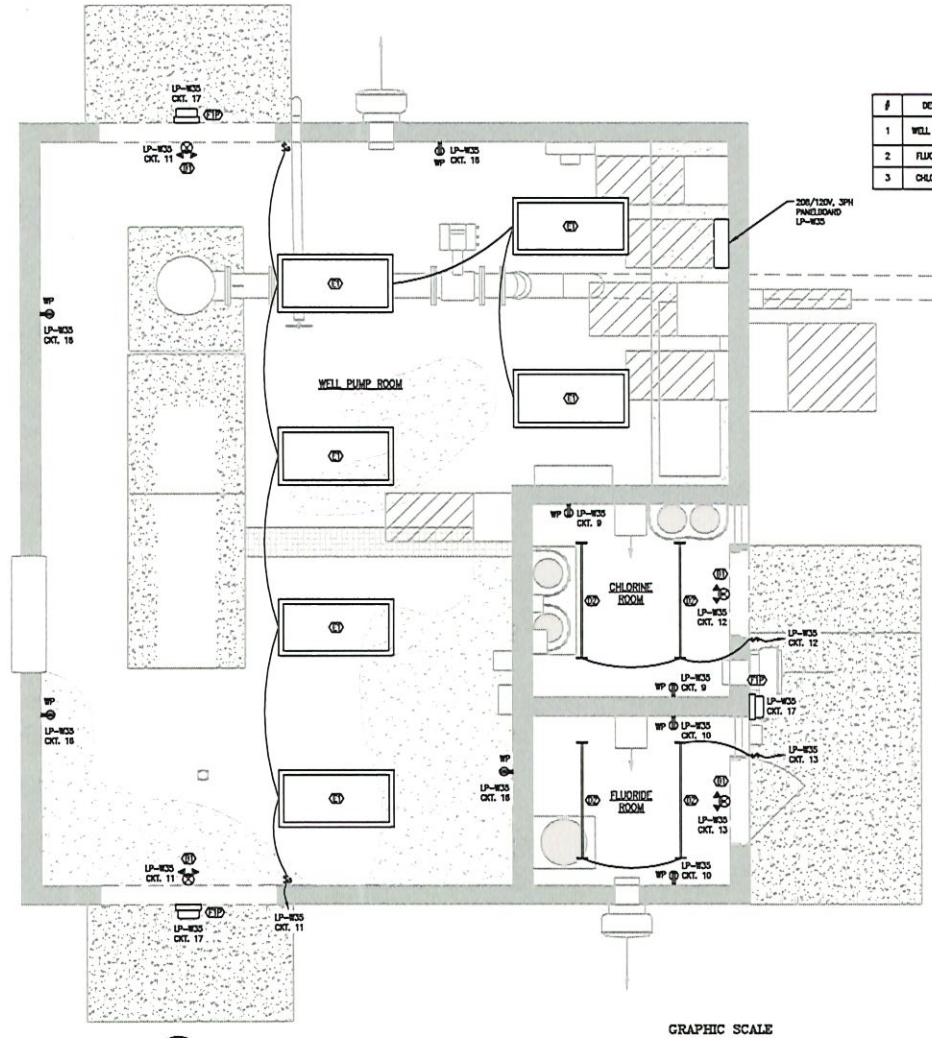

1 WELL PUMP BUILDING #35 LIGHTS & RECEPTACLES PLAN
SCALE: 1/2" = 1'-0"

GRAPHIC SCALE
(IN FEET)
1/2 inch = 1 ft.

#	DESCRIPTION	MIN	MAX	AVERAGE
1	WELL PUMP ROOM	10.3 FC	52.3 FC	33.6 FC
2	FLUORIDE ROOM	21.1 FC	27.2 FC	24.4 FC
3	CHLORINE ROOM	20.3 FC	26.8 FC	24.1 FC

NOTE:

1. ALL RECEPTACLES AND LIGHT SWITCHES IN CHEMICAL ROOMS SHALL BE CORROSION RESISTANT TYPE.
2. THE CONTRACTOR SHALL CONNECT EMERGENCY LIGHTING AHEAD OF LOCATING SWITCH.
3. DO NOT MOUNT LUMINARIES DIRECTLY ABOVE PIPES OR DUCTS. COORDINATE IN THE FIELD FOR INTERFERENCES.
4. ALL OUTDOOR TOGGLE SWITCHES SHALL BE WEATHER PROOF TYPE.

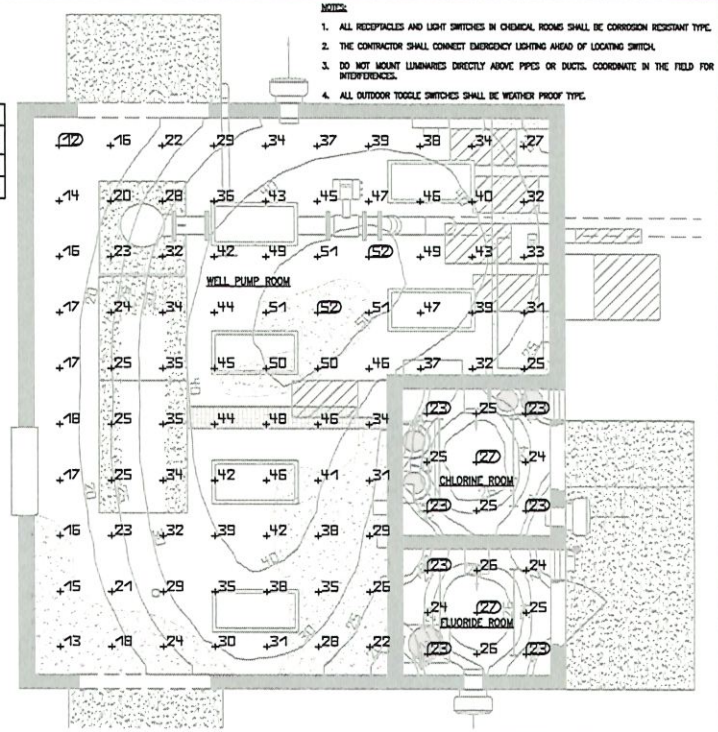

2 WELL PUMP BUILDING #35 – PHOTOMETRIC PLAN
SCALE: 3/8" = 1'-0"

GRAPHIC SCALE
(IN FEET)
3/8 inch = 1 ft.

LIGHTING/POLE SCHEDULE

SYMBOL/TYPE	DESCRIPTION	INSTALLATION ENVIRONMENT	HAZARDOUS AREA	LAMP/VOLTAGE	MOUNTING
C1	RECESSED CEILING 2' X 4' INDOOR LIGHT FIXTURE COLOR TEMPERATURE: 4000K ACCESSORIES: NONE BASIS OR DESIGN: BRAND: LITHONIA MODEL #: 2GTL-4-48L-RW-A19-LP840-N100	INDOOR; NON-CORROSIVE; DRY	N/A	LED 120-277V, 1PH 38.75WATTS	CEILING/ SURFACE
D2	INDUSTRIAL STRIP LIGHT, 4FT ENCLOSURE COLOR: WHITE COLOR TEMPERATURE: 4000K ACCESSORIES: NONE BASIS OR DESIGN: BRAND: LITHONIA MODEL #: FEM-L48-4000LM-MACD-WD-MVOLT-40K-80CRI-WLFDM2	INDOOR AND OUTDOOR; CORROSIVE & NON-CORROSIVE; DRY, DAMP AND WET	N/A	LED 120/277V, 1PH 34WATTS	CEILING/ SURFACE
F1P	INDUSTRIAL WALLPACK FIXTURE (ADJUSTABLE LIGHT OUTPUT) ENCLOSURE COLOR: DARK BRONZE COLOR TEMPERATURE: 4000K ACCESSORIES: PHOTOCELL BASIS OR DESIGN: BRAND: LITHONIA MODEL #: TWPLED-ALD-40K-T3M-MVOLT-DDBXD-PE	INDOOR AND OUTDOOR; CORROSIVE & NON-CORROSIVE; DRY, DAMP AND WET	N/A	LED 120/277V, 1PH 11-40WATTS	WALL/ SURFACE
E1	EMERGENCY LIGHT/EXIT COMBO FIXTURE COLOR: WHITE ACCESSORIES: INTERNAL BATTERY BASIS OR DESIGN: BRAND: LITHONIA MODEL #: LXRM-LED-R-RD	INDOOR & OUTDOOR; CORROSIVE & NON-CORROSIVE; DRY AND DAMP	N/A	LED 120/277V, 1PH 8WATTS	CEILING/ WALL/ SURFACE

NOTE:
DESIGN IS BASED ON THE EQUIPMENT SHOWN IN THE ABOVE SCHEDULE. LIGHTS AND POLE SHALL BE PROVIDED AND INSTALLED BY CONTRACTOR PER SCHEDULE. ANY SUBSTITUTIONS SHALL BE APPROVED BY ENGINEER PRIOR TO PURCHASE/INSTALLATION.

WELL PUMP HOUSE LIGHTS & RECEPTACLES PLAN

EDEC, INC.
4120 CHATTAHOOCHEE TRACE
SUITE A
DULUTH, GEORGIA 30097
TEL. (770) 493-8485
A SALAS O'BRIEN COMPANY

Revision	Date
A	08/13/25

STILL WATERS ENGINEERING
139 VETERANS WAY, UNIT 2, LEES-B, CA 31763 229.456.5700
WWW.STILLWATERSENG.COM

WELL No. 35 UPGRADES
FOR THE
CITY OF ALBANY UTILITIES DIVISION
DOUGHERTY COUNTY, GEORGIA

GEORGIA REGISTERED PROFESSIONAL ENGINEER DENIS VYSTROPOV

Project No.	Date:
A1202.014	AUG 2025
Scale: AS SHOWN	Designed By: DV

SHEET #: E-6
OF 9 SHEETS

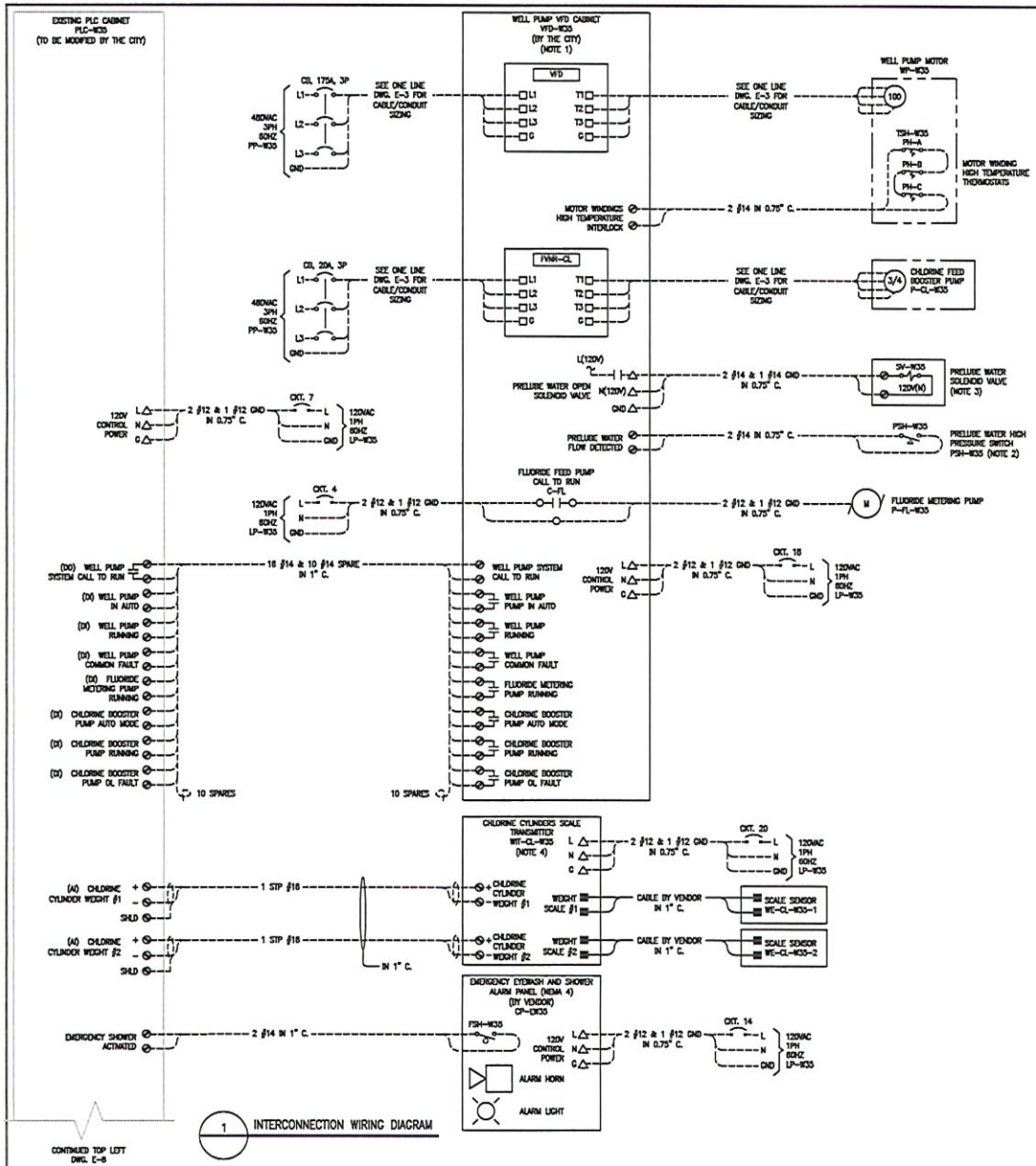

1 INTERCONNECTION WIRING DIAGRAM

LEGEND:

- □ – 480V POWER TERMINAL
- ⊘ – CONTROL TERMINAL
- △ – LOW VOLTAGE POWER TERMINAL
- ■ – DEVICE TERMINAL

NOTES:

1. WELL PUMP VFD CABINET SHALL BE PROVIDED BY CITY AND INSTALLED BY CONTRACTOR. WELL PUMP VFD CABINET SHALL INCLUDE AS A MINIMUM THE FOLLOWING:
   - A. THE CABINET ASSEMBLY SHALL BE 42AAC RATED MINIMUM.
   - B. NEMA 1 ENCLOSURE.
   - C. VARIABLE FREQUENCY DRIVE (VFD) 480V, 3PH RATED FOR 100HP MOTOR WITH MOTOR CIRCUIT PROTECTORS.
   - D. FULL VOLTAGE NON-REVERSING (FVNR) MOTOR STARTER RATED FOR 3/4HP MOTOR WITH MOTOR CIRCUIT PROTECTORS.
   - E. AUXILIARY DRY CONTACTS (120VAC, 5 AMP RATED):
     - E.1. WELL PUMP RUNNING;
     - E.2. WELL PUMP IN AUTO MODE;
     - E.3. WELL PUMP COMMON FAULT (COMBINATION OF RVSS FAULT AND MOTOR WINDING HIGH TEMPERATURE);
     - E.4. FLUORIDE BOOSTER PUMP RUNNING;
     - E.5. CHLORINE BOOSTER PUMP AUTO MODE;
     - E.6. CHLORINE BOOSTER PUMP RUNNING;
     - E.7. CHLORINE BOOSTER PUMP OL FAULT.
   - F. INDICATING LIGHTS FOR:
     - F.1. PUMP RUNNING (GREEN);
     - F.2. PUMP STOPPED (RED);
     - F.3. PUMP FAULT (AMBER).
   - G. RELAYS, FUSES, TERMINALS, "HAND-OFF-AUTO" SELECTOR SWITCH AND ALL OTHER COMPONENTS AS REQUIRED FOR PROPER PUMP OPERATION.
   - H. TIMER RELAY FOR PRELUBE WATER SOLENOID VALVE. TIMER SHALL BE TIME DELAY ON TYPE 0-10 MINUTE TIME DELAY. THE TIMER SHALL BE ELECTRONIC WITH SET-POINT ADJUSTMENT INTERFACE MOUNTED ON THE RVSS CABINET FRONT.
   - I. VFD CONTROL CABINET SHALL INCLUDE ALL INTERLOCKS AND RELAYS TO DUPLICATE THE FUNCTIONALITY OF THE EXISTING MOTOR STARTER CABINET.
   - J. INCLUDE 120V COIL, 20A, 2P, CONTACTOR C-FL TO BE CLOSED WHEN THE WELL PUMP IS RUNNING.

   THE SCHEMATIC WIRING DIAGRAM IS CONCEPTUAL IN NATURE. THE CONTRACTOR SHALL COORDINATE THE WIRING WITH THE ACTUAL CITY SUPPLIED VFD CABINET AND SHALL ADJUST NUMBER OF CABLES/CONDUITS ACCORDINGLY.
2. THE CONTRACTOR SHALL PROVIDE AND INSTALL PRE-LUBE WATER PRESSURE SWITCH WITH 120V, 2A RATED CONTACT. THE SWITCH SHALL BE RATED FOR POTABLE WATER APPLICATION.
3. THE CONTRACTOR SHALL PROVIDE AND INSTALL 120V RATED SPRING RETURN SOLENOID VALVE TO CONTROL PRELUBE WATER FLOW. SEE CONTROL STRATEGY ON THIS DRAWING FOR ADDITIONAL DETAILS.
4. THE CONTRACTOR SHALL PROVIDE AND INSTALL CHLORINE GAS CYLINDERS SCALE WHICH INCLUDES THE FOLLOWING FEATURES:
   - A. SCALE PLATFORM(S):
     - AA. CAPACITY: TWO (2) CYLINDER;
     - AB. SIZE: COORDINATE WITH THE PROCESS ENGINEER;
     - AC. CONSTRUCTION: NON-CORROSIVE PVC PLASTIC.
   - B. SCALE TRANSMITTER:
     - BA. ENCLOSURE: NEMA 4X;
     - BB. INPUT POWER: 120V, 1PH;
     - BC. CONTROL OUTPUT: 4-20mA (2-CHANNEL).

   BASIS OF DESIGN: SCALE – FORCE FLOW, MODEL WR 150-2; TRANSMITTER – FORCE FLOW, MODEL #: WIZARD 4000 SERIES.

CONTROL STRATEGY:

1. LOCAL MODE:
   - A. WHEN L-O-R SWITCH IS PLACED IN LOCAL POSITION, THE PUMP SHALL BE OPERATED BY VFD START/STOP PUSHBUTTONS. WHEN START PUSH BUTTON IS PRESSED, THE PRELUBE SOLENOID VALVE SHALL OPEN SUPPLYING WATER TO THE PUMP, CLOSURE OF THE PRELUBE WATER HIGH PRESSURE SWITCH CONTACT SHALL START THE COUNTDOWN OF THE PRESET TIME DELAY ON THE TIMER. AFTER THE DELAY IS EXPIRED, THE PUMP SHALL START AND RUN CONTINUOUSLY. THE PRELUBE VALVE SHALL CLOSE WHEN THE PUMP STARTS. WHEN THE WELL PUMP STARTS, THE RELAY "CR-FL" AND STARTER "FVNR-CL" SHALL BE ENERGIZED, STARTING FLUORIDE PUMP AND CHLORINE BOOSTER PUMP. CHEMICALS INJECTION RATE SHALL BE MANUALLY SET AT THE FLUORIDE METERING PUMP AND AT THE GAS CHLORINATOR. ONCE THE WELL PUMP OPERATION COMES TO A STOP, RELAY "CR-FL" AND STARTER "FVNR-CL" WILL BE DE-ENERGIZED AND FLUORIDE AND CHLORINE BOOSTER PUMP SHALL STOP.
   - B. RVSS STARTING/RUNNING CIRCUIT HARDWIRE INTERLOCKS SHALL INCLUDE:
     - B.1. HIGH MOTOR WINDING TEMPERATURE;
     - B.2. VFD FAULT.
2. REMOTE MODE:
   - A. WHEN L-O-R SWITCH IS PLACED IN REMOTE POSITION, THE CONTROL OF THE PUMP START/STOP SHALL COME FROM THE EXISTING RTU-W33 DRY "CALL TO RUN" CONTACT (TO BE INITIATED REMOTELY BY USER INPUT THROUGH SCADA SYSTEM). WHEN THE "CALL TO RUN" CONTACT CLOSES, THE PRELUBE WATER SOLENOID VALVE SHALL OPEN SUPPLYING WATER TO THE PUMP. CLOSURE OF THE PRELUBE WATER HIGH PRESSURE SWITCH CONTACT SHALL START THE COUNTDOWN OF THE PRESET TIME DELAY ON THE TIMER. AFTER THE DELAY IS EXPIRED, THE PUMP SHALL START AND RUN AS LONG AS SCADA "CALL TO RUN" CONTACT IS CLOSED. THE PRELUBE VALVE SHALL CLOSE WHEN THE WELL PUMP STARTS. WHEN THE WELL PUMP STARTS, THE RELAY "CR-FL" AND STARTER "FVNR-CL" SHALL BE ENERGIZED, STARTING FLUORIDE PUMP AND CHLORINE BOOSTER PUMP. CHEMICALS INJECTION RATE SHALL BE MANUALLY SET AT THE FLUORIDE METERING PUMP AND AT THE GAS CHLORINATOR. ONCE THE WELL PUMP OPERATION COMES TO A STOP, RELAY "CR-FL" AND STARTER "FVNR-CL" WILL BE DE-ENERGIZED AND FLUORIDE AND CHLORINE BOOSTER PUMP SHALL STOP.
   - B. RVSS STARTING/RUNNING CIRCUIT HARDWIRE INTERLOCKS SHALL INCLUDE:
     - B.1. HIGH MOTOR WINDING TEMPERATURE;
     - B.2. VFD FAULT.
   - C. PUMP STARTING/RUNNING SCADA INTERLOCKS SHALL REMAIN THE SAME AS FOR THE EXISTING MOTOR STARTER.

SCHEMATIC WIRING DIAGRAM

EDEC, INC.
4120 CHATTAHOOCHEE TRACE
SUITE A
DULUTH, GEORGIA 30097
TEL. (770) 493-8585
EDEC A SALAS O'BRIEN COMPANY

Revision	Date
A	08/13/25

STILL WATERS ENGINEERING
139 VETERANS WAY UNIT 2 LEESBURG, CA 31763 229.435.5703
WWW.STILLWATERSENG.COM

WELL No. 35 UPGRADES
FOR THE
CITY OF ALBANY UTILITIES DIVISION
DOUGHERTY COUNTY, GEORGIA

GEORGIA REGISTERED PROFESSIONAL ENGINEER DENIS VYSTROPOV

Project No.	Date:
A1202.014	AUG 2025
Scale: N.T.S.	Designed By: DV

SHEET #: E-7
OF 9 SHEETS

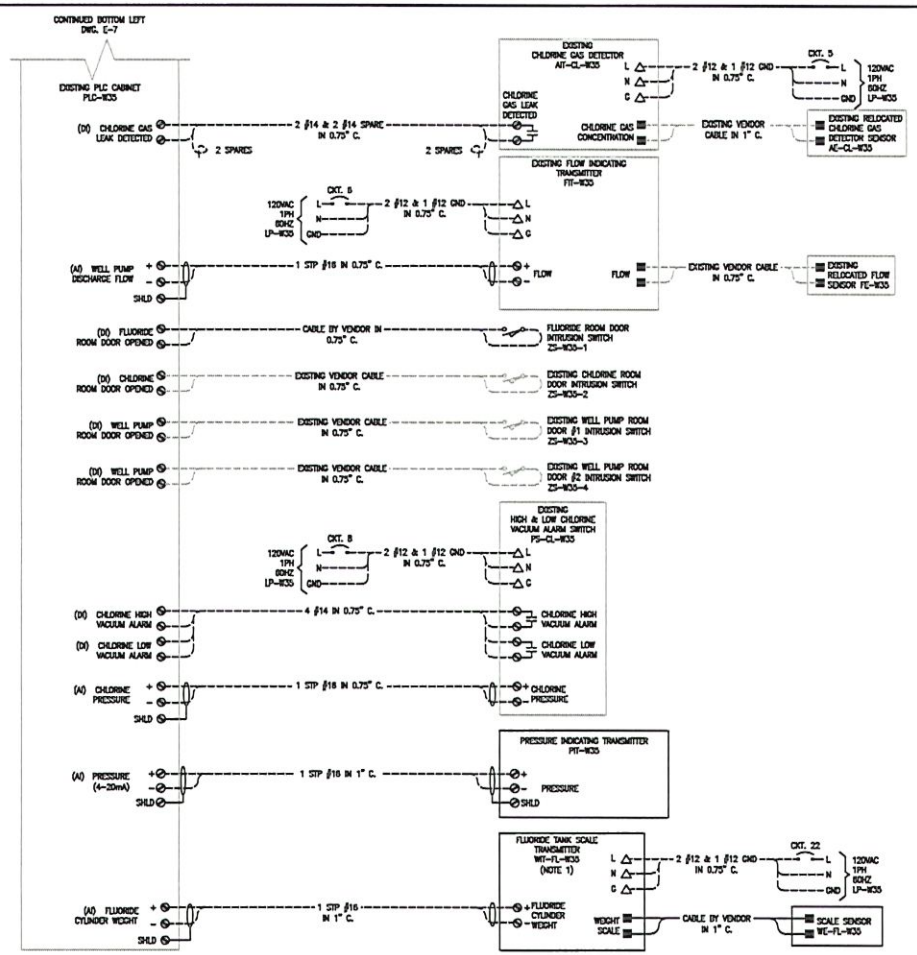

1 INTERCONNECTION WIRING DIAGRAM

NOTES:

1. THE CONTRACTOR SHALL PROVIDE AND INSTALL FLUORIDE TANK SCALE WHICH INCLUDES THE FOLLOWING FEATURES:
   A. SCALE PLATFORM(S):
      A.A. CAPACITY: ONE (1) CYLINDER;
      A.B. SIZE: COORDINATE WITH THE PROCESS ENGINEER;
      A.C. CONSTRUCTION: NON-CORROSIVE PVC PLASTIC.
   B. SCALE TRANSMITTER:
      B.A. ENCLOSURE: NEMA 4X;
      B.B. INPUT POWER: 120V, 1PH;
      B.C. CONTROL OUTPUT: 4-20mA (1-CHANNEL).
   BASIS OF DESIGN: SCALE – FORCE FLOW, MODEL FZ-31-VEC-F; TRANSMITTER – FORCE FLOW, MODEL #: WIZARD 4000 SERIES.

LEGEND:
- □ – 480V POWER TERMINAL
- ⊘ – CONTROL TERMINAL
- △ – LOW VOLTAGE POWER TERMINAL
- ■ – DEVICE TERMINAL

SCHEMATIC WIRING DIAGRAM

EDEC, INC.
4120 CHATTAHOOCHEE TRACE
SUITE A
DULUTH, GEORGIA 30097
TEL. (770) 497-8989
EDEC A SALAS O'BRIEN COMPANY

Revision	Date
A	08/13/25

STILL WATERS ENGINEERING
139 VETERANS WAY UNIT 2 LEESBURG, GA 31763 229.435.5700
WWW.STILLWATERSENG.COM

WELL No. 35 UPGRADES
FOR THE
CITY OF ALBANY UTILITIES DIVISION
DOUGHERTY COUNTY, GEORGIA

GEORGIA REGISTERED PROFESSIONAL ENGINEER DENIS VYSTROPOV

Project No. A1202.014	Date: AUG 2025
Scale: N.T.S.	Designed By: DV

SHEET #: E-8
OF 9 SHEETS

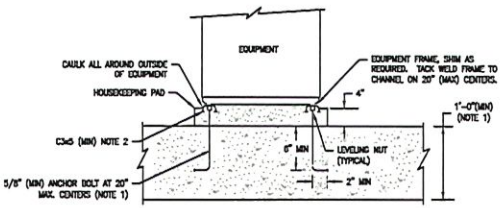

NOTES:
1. IF SLAB IS LESS THAN 12" THICK, ANCHOR BOLTS SHALL EXTEND THROUGH SLAB AND BE BACKED UP WITH 4" X 3/16" (MIN) SQUARE WASHERS.
2. CHANNELS SHALL BE LEVELED AT TIME CONCRETE IS CAST.

A TYPICAL FLOOR MOUNTING EQUIPMENT DETAIL

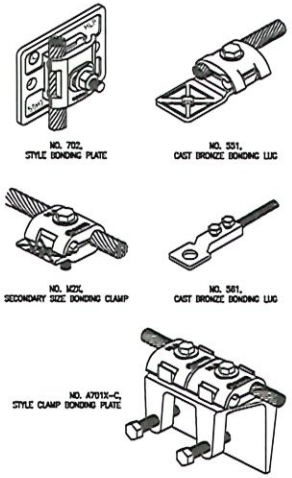

B BONDING LUGS AND PLATES

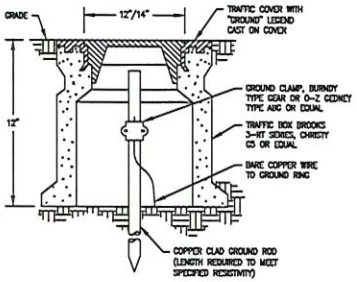

C GROUND TEST WELL

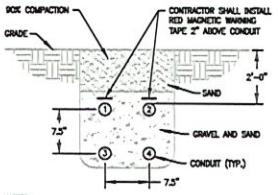

NOTES:
1. NUMBER AND SIZE OF ELECTRICAL CONDUITS SHALL BE AS INDICATED ON THE DESIGN DRAWINGS.
2. BOND THE GROUNDING CONDUCTOR TO ALL GROUNDING ELECTRODES ALONG THE DUCT BANK ROUTE, INCLUDING THE BUILDING'S GROUNDING ELECTRODE AT BOTH ENDS OF THE DUCT BANK.
3. INSTALL SADDLE-TYPE CONDUIT SPACERS AT INTERVALS OF 8'-0" OR AS OTHERWISE SPECIFIED BY THE MANUFACTURER'S RECOMMENDATIONS.

D CONDUIT SECTION IN TRENCH

ELECTRICAL INSTALLATION DETAILS

EDEC, INC.
4120 CHATTAHOOCHEE TRACE
SUITE A
DULUTH, GEORGIA 30097
TEL. (770) 497-8885
EDEC A SALAS O'BRIEN COMPANY

Revision	Date
A	08/13/25

STILL WATERS ENGINEERING
133 VETERANS WAY, UNIT 2, LITTLE ROCK, CA, 33763 229.495.5770
WWW.STILLWATERSENG.COM

WELL No. 35 UPGRADES
FOR THE
CITY OF ALBANY UTILITIES DIVISION
DOUGHERTY COUNTY, GEORGIA

GEORGIA REGISTERED PROFESSIONAL ENGINEER DENIS VYSTROPOV

Project No. A1202.014	Date: AUG 2025
Scale: N.T.S.	Designed By: DV

SHEET #: E-9
OF 9 SHEETS

October 6, 2025

INVITATION TO BID
Well No. 35 Rehabilitation
Bid Reference No. 26-022

Sealed Bids will be received by the City of Albany, Procurement Division, 222 Pine Avenue, Suite 260, Albany, Georgia 31701, until **2:30 p.m. on November 6, 2025,** for all work required to rehabilitate and upgrade Well No. 35 in accordance with bid documents, specifications, and all other contract documents.

A Pre-Bid Conference will be held on **October 15, 2025, at 10:00 a.m.** at **222 Pine Avenue, Albany, Georgia 31701.** The Project Manager will provide an overview of the work to be performed and answer questions. All interested bidders are strongly encouraged to attend.

This project will be bid on a lump sum and unit price basis for all specified work and will be awarded to the responsive and responsible bidder submitting the lowest total lump sum and unit price bid. **A 5% Bid Bond is required of all bidders.** Bid bond must be present for bid to be read or considered. 100% Performance and Payment bonds will be required of the successful bidder.

The City of Albany strongly encourages Small Business firms to participate in this bid. The City of Albany reserves the right to reject any and all bids and to waive any informality in the bidding process.

Bid documents are available at the Procurement Division, www.albanyga.gov and on the Georgia Procurement Registry.

For additional information, contact Joshua Williams, Procurement Manager, at (229) 431-3211. Submit all questions via email to jswilliams@albanyga.gov cc: kross@albanyga.gov. The deadline for questions is **October 21, 2025, at 2:30 p.m.** Replies of substance will be answered in the form of an addendum and made available to all potential bidders.

City of Albany,

Joshua Williams, CPPB
Procurement Manager

CITY OF ALBANY
FINANCE DEPARTMENT
PROCUREMENT DIVISION
ALBANY, GEORGIA
INSTRUCTIONS TO BIDDERS

These instructions will bind bidders to terms and conditions herein set forth, except as specifically qualified in special bid and contract terms issued with any individual bid.

1. The following criteria are used in determining low responsible bidder.
   (a) The ability, capacity and skill of bidder to perform required service.
   (b) Whether bidder can perform service promptly or within specified time.
   (c) The character, integrity, reputation, judgment, experience and efficiency of bidder.
   (d) The performance of previous contracts.
   (e) The suitability of equipment or material for City use.
   (f) The ability of bidder to provide future maintenance and parts service.
2. Payment terms are Net 30 unless otherwise specified. Favorable term discounts may be offered and will be considered in determining low bids if they are deemed advantageous to The City.
3. Unless otherwise specified all materials, supplies or equipment quoted herein must be delivered within thirty (30) days from date of notification of award or by exception noted on bid sheet.
4. Prospective bidders are responsible for examining the location of the proposed work or delivery and determining, in their own way, the difficulties, which are likely to be encountered in the execution of same.
5. The ESTIMATED QUANTITY given in the specifications or advertisement is for the purpose of bidding only. The City may purchase more or less than the estimated quantity, and the bidder must not assume that such estimated quantity is part of the contract.
6. All bids should be tabulated, totaled and checked for accuracy. The unit price will prevail in case of errors.
7. All requested information should be included in the sealed bid envelope. All documents and information must be signed and included for your bid to receive full consideration. **Failure to submit any required information or document will be cause for bid to be rejected as non-responsive**.
8. Failure of the bidder to sign the bid document or have the signature of any authorized representative or agent on the bid **in the space provided will be cause for rejection of the bid**. Signature(s) must be written in ink.
9. Failure to enclose bid bond, where required, **will result in rejection of the bid**. Bond may be in the form of cash, certified check, cashier's check or Surety Bond issued by a Surety Company licensed to conduct business in Georgia.
10. **All bidders should provide their tax identification number with the bid.**
11. All bidding Corporations should provide the corporate seal, a copy of the Secretary of State's Certificate of Incorporation, and a listing of the principals of the corporation with the bid.
12. Quote all prices F.O.B. Albany or our warehouse or as specified in bid documents.
13. If the bidder proposes to furnish any item of a foreign make or product, he/she should write "Foreign" together with the name of the originating country opposite such item on the bid.
14. When requested, SAMPLES will be furnished free of expense, properly marked for identification and accompanied by list where there is more than one sample. The City reserves the right to mutilate or destroy any samples submitted whenever it may be in the best interests of The City to do so for the purpose of testing.
15. The City will reject any material, supplies or equipment that do not meet the specifications, even though bidder lists the trade name or names of such materials on the bid or price quotation form.
16. Any alterations, erasures, additions or omissions of required information or any changes of specifications, or bidding schedule are done at the risk of the bidder. Any bid will be rejected that has a substantial variation, such as a variation that affects the price, quality or delivery date (when delivery is required by a specific time).
17. Each bid or proposal will be submitted in a **SEALED ENVELOPE**. Additionally, that envelope shall be clearly marked on the outside as a **Sealed Bid** with the **Bid Number** clearly printed.
18. Bids **must** be received and stamped by the Procurement Office before the date and time stipulated in bid documents. The City of Albany assumes no responsibility for submittals received after the advertised deadline or at any office or location other than that specified herein, whether due to mail delays, courier mistake, mishandling, or any other reason. No responsibility will attach to any City representative or employee for premature opening of bids not properly addressed or identified.
19. If only one bid is received, the bid may be rejected and/or re-advertised, except in the case of only one known source of supply.
20. Bids received late will not be accepted, and The City will not be responsible for late mail delivery.
21. Should a bid be misplaced by The City and found later it will be considered.
22. The unauthorized use of patented articles is done entirely at the risk of the bidder.
23. All bidders must be recognized and authorized dealers in the materials or equipment specified and be qualified to instruct in their application or use. A bidder at any time requested must satisfy the Procurement Office and City Commission that he has the requisite organization, capital, plant, stock, ability and experience to satisfactorily execute the contract in accordance with the provisions of the contract in which he is interested.

24. Only the latest model equipment as evidenced by the manufacturer's current published literature will be considered. Obsolete models of equipment not in production will not be acceptable. Equipment shall be composed of new parts and materials. Any unit containing used parts or having seen any service other than the necessary tests will be rejected. In addition to the equipment specifically called for in the specifications, all equipment catalogued by the manufacturer as standard or required by the State of Georgia shall be furnished with the equipment. Where required by the State of Georgia Motor Vehicle Code, vehicles shall be inspected and bear the latest inspection sticker of the Georgia Department of Revenue.
25. All materials, equipment and supplies shall be subject to rigid inspection, under the immediate supervision of the Procurement Officer and/or the Department to which they are delivered. If defective material, equipment or supplies are discovered, the contractor, upon being instructed by the Procurement Officer, shall remove, or make good such material, equipment or supplies without extra compensation. It is expressly understood and agreed that the inspection of materials by The City will in no way lessen the responsibility of the contractor or release him from his obligation to perform and deliver to The City sound and satisfactory materials, equipment or supplies. The contractor agrees to pay the cost of all tests on defective material, equipment or supplies or allow the cost to be deducted from any monies due him by The City.
26. For multi-year contracts the following clauses pursuant to OCGA 36-60-13 apply: (1) The contract shall terminate absolutely and without further obligation on the part of The City or County at the close of the calendar year in which it was executed and at the close of each succeeding calendar year for which it may be renewed; (2) The contract may provide for automatic renewal unless positive action is taken by The City or County to terminate such contract, and the nature of such action shall be determined by The City or County and specified in the contract; (3) The contract shall state the total obligation of The City or County for the calendar year of execution and shall further state the total obligation which will be incurred in each calendar year renewal term, if renewed; and (4) The contract shall provide that title to any supplies, materials, equipment, or other personal property shall remain in the vendor until fully paid for by The City.
27. Unless otherwise specified The City reserves the right to award each item separately or on a lump sum basis, whichever is in the best interest of The City.
28. The successful bidder shall secure all permits, license certificates, inspections (permanent and temporary) and occupational tax certificate, if applicable, before any work can commence. Contractors as well as any and all known subcontractors must possess or will be required to obtain a City of Albany Occupational Tax Certificate or Registration.
29. The successful bidder on motor vehicle equipment shall be required to furnish with delivery of vehicle, Certificate of Origin and Georgia vendors shall provide Georgia Motor Vehicle form MV1.
30. The City reserves the right to reject any and all bids, to waive any informalities in the bid process, and to award the contract as may be in the best interest of the City and/or re-advertise for bids.
31. Local bidder (domiciled in Albany City Limits) will receive bid in the event of tie bids. In the case of tie bids between out of town companies or between local concerns, evaluated as equal, bid will be recommended or awarded by chance coin toss, or drawing straws. **The Board of Commissioners passed a local preference ordinance on January 27, 2015. Where applicable, this ordinance will govern. Local preference will not be a basis for award on bids that are federally funded**.
32. No bidder writing restrictive specifications for The City will be allowed to bid on the project.
33. Reasonable grounds for supposing that any bidder is interested in more than one bid for the same item will be considered sufficient cause for rejection of all bids in which he/she is interested.
34. A contract **will not** be awarded to any corporation, firm or individual who is, from any cause, in arrears to The City/County or who has failed in any former contract with The City to perform work satisfactorily, either as to the character of the work, the fulfillment of the guarantee, or the time consumed in completing the work.
35. It is mutually understood and agreed that if any time the Procurement Officer shall be of the opinion that the contract or any part thereof is unnecessarily delayed or that the rate of progress or delivery is unsatisfactory, or that the contractor is willfully violating any of the conditions or covenants of the agreement, or is executing the same in bad faith, the Procurement Officer shall have the power to notify the aforesaid contractor of the nature of the complaint. Notification shall constitute delivery of notice, or letter, to address given in bid/proposal. If after three working days of notification the conditions are not corrected to the satisfaction of the Procurement Officer, he shall thereupon have the power to take whatever action he may deem necessary to complete the work or delivery herein described, or any part thereof, and the expense thereof, so charged, shall be deducted from any paid by The City out of such monies as may become due to the said contractor, under and by virtue of this agreement. In case such expense shall exceed the last said sum, then and in that event, the bondsman or the contractor, his executors, administrators, successors, or assigns, shall pay the amount of such excess to The City on notice by the Procurement Officer of the excess due.
36. Contracts may be cancelled by The City with or without cause with 30-day written notice.
37. Any complaint from bidders relative to the Invitation to Bid or any attached specifications should be made prior to the time of opening of bids, otherwise such complaint cannot be properly considered.
38. Any bidder may withdraw his bid at any time before the time set for opening of bids. No bid may be withdrawn without cause in the 60-day period after bids are opened.
39. All questions, inquiries and requests for clarification shall be directed to Procurement.
40. **Prior to submission, all bidders are encouraged to check the website at www.albanyga.gov or call the Procurement Office at 229-431-3211 for any addendums.**

CITY OF ALBANY
SPECIAL INSTRUCTIONS TO BIDDERS
Well No. 35 Rehabilitation
BID REF. #26-022

1. **General Information:** Well #35 Rehabilitation - The proposed project aims to comprehensively renovate to align with EPD standards. This includes the installation of a new pump and motor, thorough cleaning of well screens, and the implementation of a new column pipe and shaft. The renovation extends to the building, encompassing electrical upgrades and the necessary separation of chemical rooms. This initiative is vital for maintaining and enhancing the well's efficiency and environmental sustainability, meeting the regulatory requirements set forth by the EPD.

   The project includes comprehensive improvements to Well No. 35, as detailed below:

- Mobilization and Pump Test: Perform a pump test to determine Well capacity, static water, and pumping water levels.
- Preliminary Video Inspection: Pull the pump and conduct an initial video inspection of the well.
- Cleaning and Inspection: Clean the well casing and screens, followed by a post-cleaning video inspection.
- Pump and Motor Upgrades: Upgrade the pump and motor to meet required duty conditions.
- Pump Base Reconstruction: Demolish and reconstruct the existing pump base to meet Georgia EPD minimum standards.
- Discharge Piping Replacement: Replace discharge piping, valves, fittings, etc., to align with the new pump discharge head elevation as detailed in the plans.
- Electrical and Control Improvements: Implement electrical and control system upgrades as specified in the plans.
- Materials: The contractor will provide all materials, except where the plans specify reusing or rebuilding existing items.
- Final Testing and Disinfection: After all improvements, the Contractor will conduct performance testing, disinfection, sampling, and laboratory testing necessary to place the well back in service.

2. Contractor's bid shall include all necessary labor, materials, tools, equipment, and all other items necessary to complete the contract requirements in accordance with specifications, general conditions, special instructions to bidders and all other provisions included in this invitation to bid.

3. Bidder shall be responsible for visiting the job site and familiarizing yourself with the local conditions.

4. No bid may be withdrawn for a period of **sixty** (**60**) days from the bid opening date.

5. The Owner reserves the right to reject any and all bids and to waive any informalities in the bidding process.

6. The Owner of this project is the City of Albany.

7. **Contract Time:** Contract must be completed within **one hundred fifty (150)** calendar days following the issuance of the Notice to Proceed. Performance will be monitored and documented by the Project Manager. Not completing this contract within the time specified may hamper the contractor's ability to secure future contracts with the City.

8. **Liquidated Damages:** Time is an essential element of the Contract, and any delay in the prosecution of The Work may inconvenience the public, obstruct traffic, or interfere with business. In addition to the aforementioned inconveniences, any delay in completion of The Work will always increase the cost of engineering. For this reason, it is important that the work be pressed vigorously to completion. Should the Contractor fail to complete the work within the time stipulated in the Contract or within such extra time that may be allowed, charges shall be assessed against any money due or that may become due the Contractor in accordance with the rate of **two hundred fifty ($250)** per calendar day.

9. **Bid Bond:** Each bid shall be accompanied by a certified check, cashier's check, cash, or bid bond (surety) acceptable to the Owner, in an amount equal to at least five **(5%)** percent of the bid, payable without condition to the Owner as a guaranty that the bidder, if awarded the contract, will promptly execute the Agreement in accordance with the bid and other contract documents, and will furnish good and sufficient bond for the faithful performance of the same, and for the payment to all persons supplying labor and material for the work. The bid bond must be presented in its original form. Copies are not acceptable.

10. **Performance Bond and Payment Bonds:** A 100% Performance Bond and 100% Labor and Materials Payment Bond will be required of awarded bidder. All bonds must be submitted to the Procurement Office before work can commence. The bonds must be presented in their original form. Copies are not acceptable.

11. **Bid Form:** Bid form **must** be submitted on the bid form provided by the City of Albany. Bid is for a unit sum contract and will be awarded to the responsive and responsible bidder submitting the lowest total base bid.

12. **General Insurance Requirements:** Contractor shall maintain insurance with companies licensed to do business in the State of Georgia acceptable to the City for the protection of the City and name it as an additional insured, against all claims, losses, costs or expenses arising out of injuries or death of persons whether or not employed by contractor, whether arising from the acts or omission, negligence or otherwise of contractor or any of its agents, employees, patrons, or other persons, and growing out of work being done by Contractor on behalf of City, such policies to provide for a liability limit on account of each accident resulting in the bodily injury or death of not less than One Million ($1,000,000) Dollars, a liability limit of not less than One Million ($1,000,000) Dollars for each accident for property damage. Contractor shall also carry product/completed operations liability insurance for personal injuries and/or death in the amount not less than One Million ($1,000,000) Dollars for any one person. Contractor shall maintain a combined single liability limit of One Million ($1,000,000) Dollars covering owned, non-owned, leased, and hired vehicles. Contractor shall furnish to the City satisfactory evidence that it carries Worker's Compensation Insurance in the statutory limits of Georgia and Employers' Liability with limits of liability of no less than One Hundred Thousand ($100,000) Dollars of each accident/disease. These polices must also contain a waiver of subrogation in favor of the City of Albany. Contractor shall furnish evidence to the City of the continuance in force of said policy's declaration page (s) to the Procurement Agent. Acceptable proofs of insurance: (i) a Certificate of Insurance with Additional Insured Endorsement (a Certificate of Insurance by itself is not acceptable) or (ii) Declaration Pages of the insurance policies listed below which show the City of Albany as additional insured. All insurance policies must provide that the City of Albany will be

notified within 30 days of any changes, restrictions, and/or cancellation. The City's sole judgment shall control as to the sufficiency of the coverage.

13. **Indemnity Agreement:** An executed copy of this form should accompany your bid and must be completed for contract award. (See attached).

14. **Governing Law & Venue:** An executed copy of this form should accompany your bid. (See attached).

15. **Certificate of Non-Collusion:** An executed copy of this form should accompany your bid. (See attached).

16. **Drug Free Workplace:** An executed copy of this form should accompany your bid. (See attached).

17. **Debarred Bidders Integrity Form:** An executed copy of this form should accompany your bid. (See attached).

18. **Permits & Fees:** Within **five (5) days** following the issuance of the Notice to Proceed, the contractor shall apply for all permits. Failure to do so may result in award of this contract to the next lowest bidder and the original contractor may be billed for the difference in price. The contractor shall secure all permits, license certificates, inspections (permanent and temporary) and occupational tax certificate(s) before any work can commence. This documentation should be on file in the Procurement Office prior to the start of any work associated with this contract. The contractor is required to contact **the Project Manager, David Apperson, at 229-809-6233 within five (5) days of completion for a final inspection.** Contractor as well as any and all known subcontractors must possess or will be required to obtain a City of Albany Occupational Tax Certificate or Registration **prior** to commencement of work.

19. **Compliance:** The contractor is responsible for knowledge of and compliance with all laws, codes, ordinances, and regulations that are applicable to this type of work.

20. **Superintendent:** The contractor shall have a superintendent or representative on the site at all times while work is being performed. He will represent the contractor and all communications given to him shall be binding as if given to the contractor.

21. **Preservation of Property:** The contractor shall carry out his work with such care and by the proper methods to prevent damage to the property adjacent to the work or within streets, easement locations to the extent the owner may have rights therein, or other property of the owners or of others, whether adjacent to the work site or not, the removal, relocation, or destruction of which is not called for by the provisions of the contract documents; it being a condition of the execution of the contract that the work be performed in such manner that the property of others and other property of the owner shall not be damaged in any way. The word PROPERTY, as used, is intended to include among other types of property, public street improvements, storm and sanitary sewers, water lines and appurtenances, or other structures. Should any property be damaged or destroyed, the contractor at his own expense shall promptly, or within reasonable time, repair or make such restoration as is practical and acceptable to the owner of the damaged or destroyed property. In case of failure on the part of the contractor to repair or restore such property, or make good such damage or injury, the Building Inspector may within forty-eight (48) hours notice, proceed to repair, rebuild, or otherwise restore such property as may be necessary, and the cost thereof will be deducted from any monies due or which may become due the contractor under this contract agreement. The contractor shall, at all times in

performance of the work, employ approved methods and exercise reasonable care and skill so as to avoid delay, damage, injury or destruction of existing public service installations and structures; and shall at all times in the performance of the work avoid interference with, or interruption of, public utilities services, and shall cooperate fully with the owners thereof to the end.

22. **Public Convenience and Safety:** Fire hydrants on or adjacent to the street shall be kept accessible to the fire apparatus at all times and no material or obstructions shall be placed within ten (10) feet of any hydrant. Adjacent premises must be given access at all times and gutters shall not be obstructed. Materials shall not be stored along the streets. Traffic on streets shall be maintained at all times. Dust and debris shall not create a hazard or a nuisance.

23. **Barricades and Warnings:** The contractor shall provide erect and maintain all necessary barricades, suitable and sufficient number of watchmen to direct traffic, and take all necessary precautions for the protection of the work and safety of the public. Barricades and obstructions shall be illuminated at night and lights shall be kept burning from sunset to sunrise.

24. **Removal of Trash and Rubbish:** The contractor shall be responsible for the removal and legal disposal of all waste, trash, and rubbish resulting from the work under this contract. Work site shall be kept clean and orderly during construction; trash shall be removed from the site or adequately containerized daily.

25. **Termination for Convenience:** This contract may be terminated in whole or in part by the City of Albany with the consent of the contractor in which case the two parties shall agree upon the termination conditions, including the effective date in the case of partial termination, the portion to be terminated or by the contractor upon written notification to the City of Albany setting forth the reasons for such termination, the effective date, and in the case of partial termination, the portion to be terminated. However, if in the case of partial termination, the City of Albany determines that the remaining portion of the award will not accomplish the purposes for which the contract was awarded, the City of Albany may terminate the contract in its entirety.

26. **Certification of Bidder's Experience and Qualifications:** The undersigned bidder certifies that he is, at the time of bidding, and shall be, throughout the period of the contract, licensed by the State of Georgia to do the type of work required under terms of the contract documents. Bidder further certifies that he is skilled and regularly engaged in the general class and type of work called for in the contract documents. The bidder represents that he is competent, knowledgeable and has special skills on the nature, extent, and inherent conditions of the work to be performed. Bidder further acknowledges that there are certain peculiar and inherent conditions existent in the construction of the particular facilities, which may create, during the construction program, unusual or peculiar unsafe conditions hazardous to persons and property. Bidder expressly acknowledges that he has the skill and experience to foresee and to adopt protective measures to adequately and safely perform the construction work with respect to such hazards.

27. **Corporations:** All Corporations should provide corporate seal, a copy of the Secretary of State's Certificate of Incorporation, and a listing of the principals of the corporation with the bid.

28. **Pre-Construction Conference:** Successful bidder will be required to attend a Pre-Construction Conference with the owner's representative to discuss any details of the project, submit a proposed work program / schedule prior to the issuance of a Notice to Proceed. When work begins, contractor shall remain on this project, with normal work force, until the project is completed.

29. **Georgia Security and Immigration Compliance Act:** The successful contractor will provide certification that he is in compliance with the Georgia Security and Immigration Compliance Act, certifying that the provisions of GA Law, O.C.G.A 13-10-91, Chapter 300-10-1, per the Georgia Department of Labor, if applicable, have been complied with in full. Pursuant to O.C.G.A 13-10-90(2), all subcontractors entering into a contract or agreement for hire on this Project must be registered and participate in the Federal Work Authorization Program. **Complete and submit a copy of the form, applicable to your company, and applicable Subcontractor Affidavits, with your bid.**

30. **Contractor's Warranty:** Contractor shall guarantee all specified work performed for a period of thirty (30) days from the date of written acceptance of the work by the Owner's designated representative that all materials, labor, and workmanship provided under this contract are free from defects of any kind. At no expense to the City of Albany, the contractor shall make repairs to any defects found and reported during the warranty period. Final inspection, final acceptance, and final payment shall not be construed as a waiver of this warranty. The following are excluded from this warranty:
    a. Defects or failures resulting from abuse by the owner.
    b. Damage caused by fire, tornadoes, hail, hurricane, Acts of God, wars, riots, civil commotion, or vandalism.
    c. The contractor is not an insurer nor is he a guarantor of the suitability of or adequacy of design. Any other provisions of this warranty to the contrary notwithstanding, the contractor shall not be required to remedy any unsuitable or inadequate design.

31. **Bid Submittals (All items listed below must be submitted with bid):**
    a. Bid Form
    b. Bid Bond
    c. DBE Subcontractor Participation Form
    d. Addendum Acknowledgement Form

    The following items should be submitted with bid:
    a. Indemnity Agreement
    b. Governing Law and Venue Form
    c. Certificate of Non-Collusion Form
    d. Drug Free Workplace
    e. Debarred Bidders Integrity Form
    f. Corporate Seal
    g. Secretary of State's Certificate of Incorporation
    h. Listing of the principals of Corporation
    i. Affidavit to Comply with OCGA § 13-10-91

32. **Pre-Bid Conference:** A pre-bid conference will be held on **October 15, 2025, at 10:00 a.m.** at **222 Pine Avenue Suite 260, Albany, Georgia 31701.** All interested bidders are strongly encouraged to attend.

33. For additional information, contact Joshua Williams, Procurement Manager, at (229) 431-3211. Submit all questions via email to jswilliams@albanyga.gov cc: kross@albanyga.gov. The deadline for questions is **October 21, 2025, at 2:30 pm.** Replies of substance will be answered in the form of an addendum and made available to all potential bidders.

BID BOND

KNOW ALL MEN BY THESE PRESENTS, that we the undersigned,

_____ as PRINCIPAL,

and (Name of Principal)

_____

(Legal title and address of the Surety)

as Surety (hereinafter referred to as "Surety"), are held and firmly bound unto the City of Albany, Georgia, hereinafter called the "Local Public Agency,' in the penal sum of

_____ Dollars

($_____) lawful money of the United States, for the payment of which sum well and truly to be made, we bind ourselves, our heirs, executors, administrators, successors and assigns, jointly and severally, firmly by these presents.

_____, 20___ for the construction of _____

_____

NOW, THEREFORE, if the Principal shall not withdraw said Bid within the allowable period specified, and shall within the period specified therefor, or if no period be specified, within ten (10) days after the prescribed forms are presented to him for signature, enter into a written Contract with the Local Public Agency in accordance with the Bid as accepted, and give bond with good and sufficient surety or sureties, as may be required, for the faithful performance and proper fulfillment of such Contract; or in the event of the withdrawal of said Bid within the period specified, or the failure to enter into such Contract and give such bond within the time specified, if the Principal shall pay the Local Public Agency the difference between the amount specified in said Bid and the amount for which the Local Public Agency may procure the required work or supplies or both, if the latter be in excess of the former, then the above obligation shall be void and of no effect, otherwise it is to remain in full force and virtue.

Signed and sealed this _____ day of _____, 20___

_____	_____
(Principal)	(Witness)
_____	Seal
(Title)	
_____	_____
(Surety)	(Witness)
_____	Seal
(Title)	

PERFORMANCE BOND

KNOW ALL MEN BY THESE PRESENTS:

That _____
(Legal title and address of the Contractor)

_____
as Principal (hereinafter referred to as "Contractor"), and _____

_____
(Legal title and address of Surety)

as Surety (hereinafter referred to as "Surety"), are held firmly bound unto THE CITY OF ALBANY, GEORGIA, as Obligee (hereinafter referred to as "Owner"), in the amount of _____ Dollars ($_____), to which payment Contractor and Surety bind themselves, their heirs, executors, administrators, successors and assigns, jointly and severally, firmly by these presents.

WHEREAS, the above bounded Principal has entered into a contract with Owner dated the _____ day of _____, 20____, for the construction of

_____

NOW, THEREFORE, THE CONDITIONS OF THIS OBLIGATION are such that, if the Contractor shall promptly and faithfully perform and comply with the terms and conditions of said contract; and shall indemnify and save harmless the owner against and from all costs, expenses, damages, injury or loss to which said Owner may be subjected by reason of any wrongdoing, including patent infringement, misconduct, want of care or skill, default, failure of performance, on the part of said Principal, his agents, subcontractors or employees, in the execution or performance of said contract, then this obligation shall be null and void; otherwise it shall remain in full force and effect.

1. The said Surety to this bond, for value received, hereby stipulates and agrees that no change, extensions of time, alteration or addition to the terms of the contract or the work to be performed thereunder, or the specifications or drawings accompanying same shall in any wise affect its obligation on this bond, and it does hereby waive notice of any such change, extension of time, alteration or addition to the terms of the contract or to the work or to the specifications and drawings.

2. If pursuant to the contract documents the Contractor shall be declared in default by the Owner under the aforesaid Contract, the Surety may promptly remedy the default or shall promptly complete the contract in accordance with its terms and conditions. It shall be the duty of the Surety to give an unequivocal notice in writing to the Owner, within twenty-five (25) days after receipt of declaration of default, of the Surety's election either to remedy the default or defaults promptly or to perform the contract promptly, time being of the essence. In said notice of election, the Surety shall indicate the date on which the remedy or performance will commence, and it shall then be the duty of the Surety to give prompt notice in writing to the Owner immediately upon completion of (a) the remedy and/or correction of each default, (b) the remedy and/or correction of each item of rejected work, (c) the furnishing of each omitted item of work and (d) the performance of the contract. The Surety shall not assert solvency of its Principal as justification for its failure to give notice of election or for its failure to promptly remedy the default or defaults or perform the contract.

3. Supplementary to and in addition to the foregoing, whenever the Owner shall notify the Surety that the owner has notice that the Contractor has failed to pay any subcontractor, materialman, or laborer for labor or materials certified by the Contractor as having been paid for by the Contractor in accordance with said Contract, which said labor or materials have been included in a periodical application for payment and approved by the Owner or Owners designated Agent for payment and paid for by the Owner, the Surety shall, within 20 days of receipt of such notice, cause to be paid any unpaid amounts for such labor and materials.

4. It is expressly agreed by the Principal and the Surety that the Owner if he desires to do so, is at liberty to make inquiries at any time of subcontractors, laborers, materialmen, or other parties concerning the status of payments for labor, materials, or services furnished in the prosecution of the work.

5. No right of action shall accrue on this bond to or for the use of any person or corporation other than the Owner named herein or the legal successors of the Owner.

Signed and sealed this _____ day of _____, 20____.

_____(SEAL) In The Presence of:
Principal

_____ _____
Title Witness

_____ (SEAL)
Surety

_____ _____
Title Witness

LABOR AND MATERIAL PAYMENT BOND

THIS BOND IS EXECUTED TOGETHER WITH ANOTHER BOND IN FAVOR OF THE OWNER AS OBLIGEE CONDITIONED UPON PERFORMANCE OF THE CONTRACT.
KNOW ALL MEN BY THESE PRESENTS:
That: _____

(Legal title and address of the Contractor)

_____

as Principal (Hereinafter referred to as "Principal"), and _____

_____

(Legal title and address of the Surety)

as Surety (hereinafter referred to as "Surety"), are held and firmly bound unto the City of Albany, Georgia, as Obligee (hereinafter referred to as "Owner"), for the use and benefit of claimants defined, hereinafter, in the amount of _____ Dollars ($_____), to which payment Principal and Surety bind themselves, their heirs, executors, administrators, successors and assigns, jointly and severally, firmly by these presents:

WHEREAS, the above bounded Principal has entered into contract with Owner dated _____, 20___ for the construction of _____

_____.

NOW, THEREFORE, THE CONDITION OF THIS OBLIGATION is such that is the Principal shall promptly make payment to all subcontractors and other persons for all labor and materials supplied in the prosecution of the work provided for in said contract, then this obligation shall be void; otherwise, it shall remain in full force and effect.

It is agreed that this bond is executed pursuant to and in accordance with the provisions of Sections 23-1705 et. Seq. Of the Code of Georgia, as amended by the act approved February 27, 1956, and it intended to be and shall be construed to be a bond in compliance with the requirements thereof.

Signed and sealed this _____ day of _____ , 20____ .

_____(Seal) In the Presence Of:
Principal

_____
Title Witness

_____(Seal)
Surety

_____
Title Witness

COMPLETE AND SUBMIT

Proposal Reference No. 25-008

BID FORM

SCHEDULE OF DBE PARTICIPATION

Name of Proposer: _____

NAME OF DBE SUBCONTRACTOR	ADDRESS (COUNTY, STATE)	TYPE OF WORK SUBCONTRACTED	DBE	SUBCONTRACT VALUE	DBE PARTICIPATION VALUE
				$	$
				$	$
				$	$
				$	$
				$	$
				$	$
				$	$

DBE PARTICIPATION TOTAL VALUE.....$_____

The attainment of DBE participation goals for this contract will be measured as a percentage of the total dollar value of the contract. The undersigned will enter into a formal agreement with the MBE/WBE Subcontractors identified herein for work listed in this schedule conditioned upon execution of a contract with:

_____

Sworn to and subscribe before me, this _____day of_____,20____.

_____ (SEAL)

NOTARY PUBLIC

Name (Typed) _____

**** COMPLETE AND SUBMIT ****

CITY OF ALBANY
BID REFERENCE NO. 26-022
ADDENDUM ACKNOWLEDGEMENT FORM

Instructions: Please acknowledge receipt of addenda received by completing this addendum acknowledgement form. Check the box next to each addendum received and sign below. This addendum acknowledgement form must be submitted with your bid.

Acknowledgement: I, the undersigned, acknowledge receipt of the following addenda to the above referenced Invitation to Bid and have made any necessary revisions to my response or submittal. I understand that failure to confirm the receipt of addenda may be cause for rejection of this bid.

Addendum No. 1 ☐ Addendum No. 3 ☐

Addendum No. 2 ☐ Addendum No. 4 ☐

☐ No Addenda received for Bid Reference NO.26-022

_____
Print Name and Title of Authorized Signer

_____
Authorized Signature

_____
Date

COMPLETE AND SUBMIT

GOVERNING LAW AND VENUE

Contractor agrees that as to any actions or proceedings arising out or related to this agreement, any such proceedings shall be governed and determined by Georgia Law.

Contractor further agrees that as to any actions or proceedings arising out of or related to this agreement, any such action or proceeding shall be resolved only in an appropriate court located in Dougherty County, Georgia.

DATE: _____

COMPANY NAME: _____

AUTHORIZED REPRESENTATIVE NAME: _____

TITLE: _____

SIGNATURE: _____

COMPLETE AND SUBMIT

CERTIFICATION* OF *NON-COLLUSION

The bidder being sworn, disposes and says, _____

_____

The Contractor submitting this, and its agents, officers or employees have not directly or indirectly entered into any agreements, participated in any collusion or otherwise taken any action in restraint of free competitive bidding in connection with this bid.

DATE: _____

COMPANY NAME: _____

AUTHORIZED REPRESENTATIVE NAME: _____

TITLE: _____

SIGNATURE: _____

COMPLETE AND SUBMIT

Drug Free Workplace Certification

DRUG FREE WORKPLACE REQUIREMENTS: The Contractor will provide the following certification that a Drug Free Workplace will be provided on the Project.

The undersigned certifies that the provisions of Code Sections 50-24-1 through 50-24-6 of the Official Code of Georgia Annotated, relating the "Drug Free Workplace Act", have been complied with in full. The undersigned further certifies that:

1. A drug free workplace will be provided for the Contractor's employees during the performance of the Contract; and
2. Each Contractor who hires a Subcontractor to work in a drug free workplace shall secure from that Subcontractor the following written certification:

DATE: _____

COMPANY NAME: _____

AUTHORIZED REPRESENTATIVE NAME: _____

TITLE: _____

SIGNATURE: _____

COMPLETE AND SUBMIT

DEBARRED BIDDERS/INTEGRITY CERTIFICATION

Certification Regarding Debarment, Suspension, Ineligibility, and Voluntary Exclusion
(49 CFR, Part 29):

The Contractor must certify that neither it nor its principals are presently debarred, suspended, proposed for disbarment, declared ineligible, or voluntarily excluded from participation in this transaction by any Federal department or agency. Further, the Contractor certifies that he or she shall obtain an identical certification from all its sub-contractors. The Contractor also agrees that when a subcontractor is unable to certify to any of the statements in this certification, the prospective participant shall submit an explanation to the Contractor.

DATE: _____

COMPANY NAME: _____

AUTHORIZED REPRESENTATIVE NAME: _____

TITLE: _____

SIGNATURE: _____

COMPLETE AND SUBMIT

INDEMNITY AGREEMENT

This indemnity agreement made and entered into in favor of CITY OF ALBANY ("ALBANY"), a municipal corporation, by _____.

WHEREAS, _____has submitted a bid to ALBANY so as to provide

_____.

NOW, THEREFORE, as an additional consideration in ALBANY awarding the bid to _____,

_____agrees to indemnify and hold harmless, ALBANY, its agents, principals, officers, and employees, their successors and assigns, individually and collectively, with respect to all third party claims, demands or liability for any injuries to any person (including death) or damage to any property arising out of any alleged negligence of its officers, agents, or employees in connection with the product or services involved in the bid; provided this indemnity shall not extend to any damage, injury or loss due to ALBANY's sole negligence or willful injury.

[_____] shall reimburse ALBANY for reasonable attorney fees and expenses of ALBANY in defending all such claims and shall also be responsible for payment of all judgements.

WITNESS THE HAND AND SEAL of the undersigned pursuant to proper corporate authority this, ____ day of _____, 20__.

[CORPORATE NAME]

By: _____

Title _____

Attest:_____

Title _____

[Affix Corporate Seal]

GEORGIA SECURITY AND IMMIGRATION COMPLIANCE ACT AFFIDAVIT

Contractor's Name:	
Address:	
Solicitation/Contract No.:	26-022
Solicitation /Contract Name:	Well No. 35 Rehabilitation

CONTRACTOR AFFIDAVIT

I understand that the City of Albany may not enter into a contract with _____ (Name of Corporation) unless it has registered and does participate in the Federal Work Authorization Program defined in O.C.G.A. § 13-10-90(2), to-wit" (2) "Federal work authorization program" means any of the electronic verification of work authorization programs operated by the United States Department of Homeland Security or any equivalent federal work authorization program operated by the United States Department of Homeland Security to verify information of newly hired employees, pursuant to the Immigration Reform and Control Act of 1986 (IRCA), D.L. 99-603.

By executing this affidavit, the undersigned Contractor verifies its compliance with O.C.G.A. § 13-10-91, stating affirmatively that the individual, entity or corporation which is engaged in the physical performance of services on behalf of the **City of Albany** has registered with, is authorized to use and uses the federal work authorization program commonly known as E-Verify, or any subsequent replacement program, in accordance with the applicable provisions and deadlines established in O.C.G.A. § 13-10-91.

Furthermore, the undersigned Contractor will continue to use the federal work authorization program throughout the contract period and the undersigned Contractor will contract for the physical performance of services in satisfaction of such contract only with sub-Contractors who present an affidavit to the Contractor with the information required by O.C.G.A. § 13- 10-91(b). Contractor hereby attests that its federal work authorization user identification number and date of authorization are as follows:

_____ _____

Federal Work Authorization User Identification No. Date of Authorization (EEV/E-Verify Company Identification Number)

_____

Name of Contractor

I hereby declare under penalty of perjury that the foregoing is true and correct.

_____ _____

Printed Name (of Authorized Officer or Agent of Contractor) Title (of Authorized Officer or Agent Contractor)

_____ _____

Signature (of Authorized Officer or Agent) Date

Signed SUBSCRIBED AND SWORN BEFORE ME ON

_____ [NOTARY SEAL]

Notary Public

My Commission Expires: _____

COMPLETE AND SUBMIT

Advertisement Form

For All Firms Participating in the bid please answer questions below:

Please let us know how you heard about the BID/RFP advertisement by selecting one of the following.

1. Internet/Social Media to include Facebook, etc. Yes____ No____
2. City of Albany website Yes____ No____
3. City of Albany local access channel (channel 16) Yes____ No____
4. Georgia Procurement Registry Yes____ No____
5. Other: _____

Please indicate if you are a DBE: Yes_____ No_____

DATE: _____

COMPANY NAME: _____

AUTHORIZED REPRESENTATIVE NAME: _____

TITLE: _____

SIGNATURE: _____

CONTRACT
Well No. 35 Rehabilitation
Bid Reference No. 26-022

THIS AGREEMENT, made as of the _____ day of_____20____, by and between The City of Albany, Ga., (Party of First Part, hereinafter called the Owner) and _____ _____, (Party of the Second Part, hereinafter called the Contractor).

WITNESSETH: That the said Contractor has agreed, and by these present does agree with the said Owner, for the consideration herein mentioned in his bid and under the penalty expressed in bid document, hereto attached, to furnish all equipment, tools, and materials, skill and labor of every description necessary to carry out and complete in good, firm, and substantial workmanlike manner, the specified work in strict conformity with the drawings and specifications hereinafter set forth which together with the foregoing bid made by the Contractor, the Notice to Contractors, Instructions to Bidders, General Conditions, Addenda, Special Provisions and this Agreement, shall all form essential parts of the Agreement. The work covered by this Agreement includes all work shown on drawings and specifications and listed in the attached bid.

The Owner shall pay, and the Contractor shall receive the **LUMP SUM** stipulated in the Bid for the **Well No. 35 Rehabilitation Bid Ref. #26-022** as full compensation for everything furnished and done by the Contractor under this Contract. The full lump sum of **$**_____ shall be paid in thirty (30) day increments in the manner and according to the terms specified in the Contract Documents, included in the Contractor's periodic estimate. If the Contractor shall not have submitted evidence satisfactory to the Owner that all payrolls, material bills, and other indebtedness connected with the work have been paid, the Owner may withhold, in addition to the retained percentages, such amount or amounts as may be necessary to pay just claims for labor, services rendered and materials in and about the work, and such amount or amounts withheld or retained may be applied by the Owner, to the payment of just claims.

Contractor is required to provide acceptable proof of insurance coverage. Acceptable proofs are a Certificate of Insurance with Additional Insured Endorsement (a Certificate of Insurance by itself is not acceptable) or Declaration Pages of the insurance policies listed which show the City of Albany as additional insured. The insurance company must be authorized to provide insurance in the State of Georgia. Required Insurance Policies and Endorsements are: Commercial General Liability of at least **$1,000,000** for bodily injury and property damage with the City of Albany as additional insured, Automobile/Vehicle Liability of at least **$500,000** each occurrence for bodily injury and property damage covering owned, non-owned, leased and hired autos/vehicles with the City of Albany as additional insured and Worker's Compensation in the statutory limits of Georgia and Employers' Liability with limits of liability of no less than **$100,000** of each accident/disease. These policies must also contain a waiver of subrogation in favor of the City of Albany. All insurance policies must provide that the City of Albany will be notified within 30 days of any changes, restrictions and/or cancellation. If applicable, Professional Liability in addition to above requirements, of at least **$500,000** each claim. Proof of insurance must be submitted to the Procurement Division and approved by Risk Management prior to performance of any work.

Contractor agrees that as to any actions or proceedings arising out or related to this agreement, any such proceedings shall be governed and determined by Georgia Law.

The Contract terminates immediately and absolutely at such time as appropriated and otherwise unobligated funds are no longer available to satisfy City's obligation under the contract.

Contractor further agrees that as to any actions or proceedings arising out of or related to this agreement, any such action or proceeding shall be resolved only in an appropriate court located in Dougherty County, Georgia.

Contractor agrees to indemnify and hold harmless the City, its agents, officers, and employees, their successors and assigns, individually and collectively, with respect to all claims, demands or liability for any injuries to any person (including death) or damage to any property arising out of the activities of contractor or based on alleged negligence of contractor, its officers, agents, or employees and contractor shall defend against all such claims and pay all expenses of such defense, including attorney fees, and all judgments based thereon; provided that this obligation shall not extend to any damage, injury or loss due to the negligence of the City.

IN WITNESS WHEREOF the parties hereto have executed this Agreement in quadruplicate this ____ day of _____, 20___.

CITY OF ALBANY, GA.
(Owner)

BY: _____
AUTHORIZED SIGNATURE

_____
(Title)

_____
(Contractor)

(SEAL)

By: _____

_____
(Title)

_____
(Witness)

_____
(Witness)

WELL NO. 35 UPGRADES

FOR THE

CITY OF ALBANY UTILITIES DIVISION

DOUGHERTY COUNTY, GEORGIA

AUGUST, 2025

STILL WATERS PROJECT No.: A1202.014

CITY COMMISSIONERS

NAME	TITLE
BO DOROUGH, Jr.	MAYOR
JON HOWARD	COMMISSIONER
VILNIS GAINES	COMMISSIONER
CHAD E. WARBINGTON	COMMISSIONER
BOB LANGSTAFF, Jr.	COMMISSIONER
DIANA BROWN	COMMISSIONER
WILLIE WEAVER, SR.	COMMISSIONER

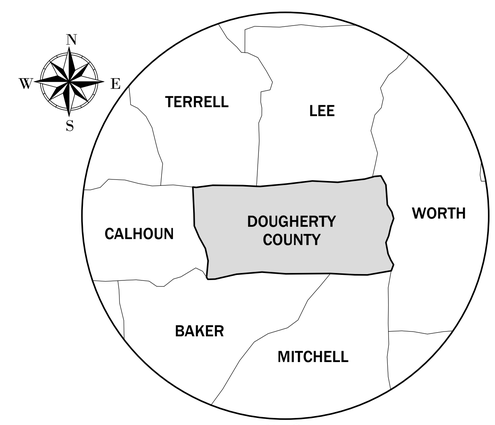

N.T.S.

INDEX TO DRAWING

-	COVER
1	GENERAL NOTES, ABBREVIATIONS & LOCATION MAP
2	EROSION, SEDIMENTATION AND POLLUTION CONTROL NOTES
3	WELL NO. 35 - EXISTING SITE PLAN
4	WELL NO. 35 - DEMOLITION PLAN
5	WELL NO. 35 - PROPOSED IMPROVEMENTS
6	CONSTRUCTION DETAILS
E-1	ELECTRICAL LEGEND & NOTES
E-2	ELECTRICAL MATERIALS SCHEDULE
E-3	ONE LINE DIAGRAM
E-4	WELL PUMP HOUSE ELECTRICAL PLAN - DEMOLITION
E-5	WELL PUMP HOUSE ELECTRICAL PLAN
E-6	WELL PUMP HOUSE LIGHTS & RECEPTACLES PLAN
E-7 - E-8	SCHEMATIC WIRING DIAGRAM
E-9	ELECTRICAL INSTALLATION DETAILS

GEORGIA REGISTERED NO.30817 PROFESSIONAL ENGINEER JAMES BRIAN HENDERSON

LEVEL II CERTIFIED DESIGN
PROFESSIONAL, CERT. #13669
EXPIRES: 12/08/2027

PREPARED BY:

STILL WATERS
ENGINEERING
130 VETERINARY WAY, UNIT 2, LEESBURG, GA. 31763, 229.496.5700
WWW.STILLWATERSENG.COM

REVISIONS

GENERAL CIVIL PLAN NOTES

1. ALL CONSTRUCTION SHALL COMPLY WITH THE CITY OF ALBANY AND COUNTY CODES AND STANDARDS, ALONG WITH ALL OTHER APPLICABLE FEDERAL, STATE AND LOCAL STANDARDS.
2. CONTRACTOR SHALL BE RESPONSIBLE FOR THE PROTECTION OF EXISTING UTILITIES, MAILBOXES, FENCES, SHRUBBERY, TREES, LANDSCAPING, SIGNS AND ALL OTHER STRUCTURES FROM DAMAGE DURING CONSTRUCTION. THE COST OF REPAIR AND REPLACEMENT OF ANY UTILITIES, SHRUBBERY, TREES, SIGNS AND ANY OTHER STRUCTURES, DAMAGED DURING CONSTRUCTION, SHALL BE THE RESPONSIBILITY OF THE CONTRACTOR. HOWEVER, ALL MAILBOXES, FENCES, SHRUBBERY, TREES, LANDSCAPING, SIGNS AND ALL OTHER STRUCTURES INTERFERING WITH CONSTRUCTION (WITHIN NON GDOT RIGHT-OF-WAY) SHALL BE REMOVED AND REPLACED BY THE CONTRACTOR AT THE CONTRACTORS EXPENSE. CONTRACTOR SHALL COORDINATE WITH ENGINEER AND PROPERTY OWNER PRIOR TO PERFORMING ANY SUCH WORK.
3. EXISTING UTILITY LOCATIONS ARE APPROXIMATE, CONTRACTOR SHALL VERIFY EXISTING UTILITY LOCATIONS IN FIELD (WHETHER OR NOT SHOW ON PLANS) PRIOR TO CONSTRUCTION. NO GUARANTEE IS MADE THAT THE UNDERGROUND UTILITIES SHOWN COMPRISE ALL SUCH UTILITIES IN THE AREA, EITHER IN SERVICE OR ABANDONED. THE CONTRACTOR SHALL HAVE ALL EXISTING UTILITIES LOCATED AND CLEARLY MARKED BY THE PROPER UTILITY DEPARTMENT PRIOR TO ANY CONSTRUCTION.
4. CONTRACTOR SHALL BE RESPONSIBLE FOR THE RELOCATION OR ADDITION OF ALL SITE UTILITIES AND SERVICES, AND ALL ASSOCIATED APPURTENANCES, AS WELL AS ANY ASSOCIATED COSTS, AND COORDINATE WITH THE RESPECTIVE UTILITY/SERVICE COMPANIES AND THE OWNER. WORK ASSOCIATED WITH UNFORESEEN UTILITY RELOCATIONS, SUBJECT TO APPROVAL OF ANY ASSOCIATED CHANGE ORDER, WILL BE PAID FOR BY OWNER. THE CONTRACTOR SHALL GIVE THREE WORKING DAYS NOTICE TO THE OWNER, APPLICABLE UTILITY COMPANIES AND UTILITIES PROTECTION CENTER (AT 1-800-282-7411) PRIOR TO ANY EXCAVATION IN ORDER THAT UNDERGROUND UTILITIES MAY BE LOCATED AND PROTECTED.
5. EXISTING SIGN LOCATIONS ARE APPROXIMATE. SIGNS SHALL BE REMOVED AND RELOCATED AS NEEDED TO CONSTRUCT NEW IMPROVEMENTS. UNLESS NOTED OTHERWISE, ALL EXISTING SIGNS SHALL REMAIN.
6. WHERE WATER LINES AND OTHER UTILITY LINES CROSS, WATER LINES SHALL BE INSTALLED SUCH THAT THE VERTICAL DISTANCE FROM THE OUTSIDE EDGE OF THE OTHER UTILITY LINE TO THE OUTSIDE EDGE OF THE WATERLINE IS A MINIMUM OF 18" WHILE ALSO MAINTAINING MINIMUM REQUIRED COVER, UNLESS NOTED OTHERWISE. GENERALLY WATER LINES SHALL BE INSTALLED ABOVE SEWER LINES, HOWEVER, WHERE WATER LINES ARE INSTALLED BELOW SEWER LINES ADDITIONAL MEASURES SHALL BE IMPLEMENTED AS REQUIRED BY THE GEORGIA ENVIRONMENTAL PROTECTION DIVISION, AT NO ADDITIONAL COSTS TO THE OWNER.
7. CONCRETE THRUST BLOCKING, IN ACCORDANCE WITH THE "TYPICAL HORIZONTAL THRUST BLOCK" DETAIL ON THE CONSTRUCTION DETAILS SHEETS OF THESE PLANS, SHALL BE CONSTRUCTED BEHIND ALL WATER LINE FITTINGS AND TAPPING SLEEVES/VALVES, EVEN IF RESTRAINED JOINTS OR RODDING ARE USED.
8. LENGTHS OF PIPE DO NOT INCLUDE END TREATMENTS.
9. CONTRACTOR SHALL ADJUST ALL MANHOLE TOPS, WATER VALVES, GAS VALVES, IRRIGATION VALVES, FIRE HYDRANTS, TELEPHONE PEDESTALS, WATER METERS, GAS METERS, CLEAN OUTS, ETC. (AFFECTED BY NEW CONSTRUCTION) TO FINISHED GRADE, UNLESS OTHERWISE NOTED.
10. THE CONTRACTOR SHALL BE RESPONSIBLE FOR VERIFYING THE OBTAINMENT OF ALL PERMITTING AND APPROVALS, TEMPORARY EASEMENTS, PERMANENT EASEMENTS AND RIGHT-OF-WAY THAT MAY BE NECESSARY TO CONSTRUCT AND OPERATE IN AN APPROPRIATE LEGAL MANNER, PRIOR TO THE COMMENCEMENT OF CONSTRUCTION, AND HAVE ALL NECESSARY DOCUMENTS IN HAND.
11. ALL INITIAL EROSION, SEDIMENTATION AND POLLUTION CONTROL DEVICES SHALL BE IN PLACE PRIOR TO CONSTRUCTION ACTIVITIES.
12. THE CONTRACTOR SHALL REVIEW AND VERIFY ALL DIMENSIONS SHOWN ON THE PLANS AND REVIEW ALL FIELD CONDITIONS THAT MAY AFFECT CONSTRUCTION. SHOULD APPARENT DISCREPANCIES OCCUR, THE CONTRACTOR SHALL NOTIFY THE ENGINEER TO OBTAIN THE ENGINEER'S CLARIFICATION BEFORE COMMENCEMENT OF CONSTRUCTION ACTIVITIES.
13. THE CONTRACTOR SHALL USE ALL NECESSARY SAFETY PRECAUTIONS TO AVOID CONTACT WITH OVERHEAD AND UNDERGROUND POWER LINES. BEFORE WORKING WITHIN 10 FEET OF POWER LINES OF 750 VOLTS OR MORE, NOTIFY THE UTILITIES PROTECTION CENTER AT 1-800-282-7411 IN COMPLIANCE WITH GEORGIA HIGH VOLTAGE SAFETY ACT.
14. THE CONTRACTOR IS SOLELY RESPONSIBLE FOR SITE SAFETY PROGRAMS/PROCEDURES AND THE IMPLEMENTATION AND COMPLIANCE THEREOF.
15. THE CONTRACTOR SHALL PROVIDE THE CONSTRUCTION MEANS, METHODS AND MATERIALS NECESSARY TO PROVIDE COMPLETE AND OPERATIONAL SYSTEMS AS SHOWN IN ENTIRE CONTRACT DOCUMENTS.
16. THE CONTRACTOR SHALL MAINTAIN A CLEAR PATH FOR ALL SURFACE WATER, DRAINAGE STRUCTURES AND DITCHES DURING ALL PHASES OF CONSTRUCTION. CONTRACTOR SHALL PROVIDE EROSION, SEDIMENTATION & POLLUTION CONTROL MEASURES IN ACCORDANCE WITH THE PROJECT'S BMP GUIDELINES, AND GEORGIA ENVIRONMENTAL PROTECTION DIVISION CRITERIA, SAID CONTROL MEASURES SHALL BE INSPECTED AND MAINTAINED DAILY.
17. UNLESS OTHERWISE SPECIFIED, THE CONTRACTOR SHALL REPLACE ALL EXISTING PAVING, STABILIZED EARTH, CURBS, DRIVEWAYS, SIDEWALKS, LANDSCAPING, FENCES, MAILBOXES, IRRIGATION SYSTEMS, SIGNS AND OTHER IMPROVEMENTS DISTURBED BY CONSTRUCTION TO EQUAL OR BETTER THAN PRE-CONSTRUCTION CONDITIONS, AT NO ADDITIONAL COST TO THE OWNER.
18. IT IS THE CONTRACTOR'S RESPONSIBILITY, PRIOR TO BIDDING, TO INSPECT THE JOB SITE AND BECOME TOTALLY FAMILIAR WITH THE PLANS AND THEIR INTENT, SHOULD THERE BE ANY QUESTIONS, THE CONTRACTOR SHALL INQUIRE FOR CLARIFICATION.
19. THE CONTRACTOR SHALL REVIEW AND VERIFY ALL DIMENSIONS SHOWN ON THE PLANS AND REVIEW ALL FIELD CONDITIONS THAT MAY AFFECT CONSTRUCTION, SHOULD APPARENT DISCREPANCIES OCCUR. THE CONTRACTOR SHALL NOTIFY THE ENGINEER TO OBTAIN THE ENGINEER'S CLARIFICATION BEFORE COMMENCEMENT OF CONSTRUCTION ACTIVITIES.
20. THE CONTRACTOR SHALL PROVIDE SHOP DRAWINGS TO THE ENGINEER FOR REVIEW AND APPROVAL PRIOR TO THE FABRICATION OF PROPOSED CIVIL SITE IMPROVEMENTS. SHOP DRAWINGS SHALL BE CLEARLY MARKED DENOTING THE SPECIFIC ITEM FOR REVIEW. WHERE A DEVIATION FROM THE DESIGN IS PROPOSED, THE SHOP DRAWING SHALL HAVE A SPECIFIC NOTE DETAILING THE DEVIATION AND REASON FOR SUCH.
21. CONTRACTOR SHALL APPLY PERMANENT SEEDING, MULCH, TEMPORARY SEEDING AND DUST CONTROL AT ALL AREAS DISTURBED BY CONSTRUCTION.
22. "AS-BUILT" DRAWINGS SHALL BE PROVIDED BY THE CONTRACTOR. THE CONTRACTOR SHALL PROVIDE A SET OF MARKED UP "AS-BUILT" DRAWINGS AS WELL AS A CD CONTAINING THE AS-BUILT INFORMATION IN ELECTRONIC FORM. AT A MINIMUM THE AS-BUILT INFORMATION SHALL INCLUDE SURVEYED VALVE LOCATIONS, LINE WORK AND PAD LOCATIONS. NO SEPARATE MEASUREMENT OR PAYMENT SHALL BE MADE FOR RECORD SURVEY OR "AS-BUILT" DRAWINGS. THESE ITEMS SHALL BE CONSIDERED A SUBSIDIARY OBLIGATION OF THE CONTRACT. CONTRACTOR SHALL PROVIDE ALL AS-BUILT/RECORD DRAWING INFORMATION AS REQUIRED BY ALL APPLICABLE FEDERAL, STATE AND LOCAL REVIEWING AGENCIES AND OWNER, AT NO ADDITIONAL COST TO THE OWNER.

GENERAL UTILITY INFORMATION

1. GENERAL CONTRACTOR RESPONSIBILITIES: CONTRACTOR SHALL, IN A TIMELY MANNER, COORDINATE ALL NEW WORK WITH ALL APPLICABLE LOCAL UTILITY SERVICE PROVIDERS. CONTRACTOR SHALL PAY ALL FEES AND VERIFY ALL OTHER REQUIREMENTS HAVE BEEN MET PRIOR TO CONSTRUCTION.

GENERAL UTILITY INFORMATION

1. THE TOTAL AFFECTED/DISTURBED AREA OF THIS PROJECT IS APPROXIMATELY 0.05 ACRES.
2. IT IS POSSIBLE THAT THERE ARE RECORDED DEEDS, UNRECORDED DEEDS, EASEMENTS, OR OTHER INSTRUMENTS NOT SHOWN HEREON THAT COULD AFFECT THIS PROPERTY.
3. FLOOD INSURANCE RATE MAP, COMMUNITY NUMBER 13095C0115E, DATED SEPTEMBER 25, 2009, SHOWS THE EXISTING LAND AND SURROUNDING AREA TO BE IN ZONE "D" – AREAS OF UNDETERMINED FLOOD HAZARD. THE SITE IS IN ALBANY, DOUGHERTY COUNTY, GA.
4. NO SURVEY WORK WAS PERFORMED FOR THIS PROJECT.

ABBREVIATIONS

CONC. = CONCRETE
EXIST. = EXISTING
ELEV. = ELEVATION
N = NORTH
E = EAST
S = SOUTH
W = WEST
INV. = INVERT
RCP = REINFORCED CONCRETE PIPE
CPP = CORRUGATED POLYETHYLENE PIPE
SHT. = SHEET
IPF = IRON PIN FOUND
D/W = DRIVEWAY
R/W = RIGHT OF WAY
N.T.S. = NOT TO SCALE
FFE = FINISHED FLOOR ELEVATION
DB = DEED BOOK
TC = TOP OF CURB
CONC. = CONCRETE
ASP. = ASPHALT
FES = FLARED END SECTION
STD. = STANDARD
PVC = POLYVINE CHLORIDE
SY = SQUARE YARD
L.F. = LINEAR FEET

STA. = STATION
INV. = INVERT
TYP. = TYPICAL
SS = SANITARY SEWER
PVC = POLYVINYL CHLORIDE
MH = MANHOLE

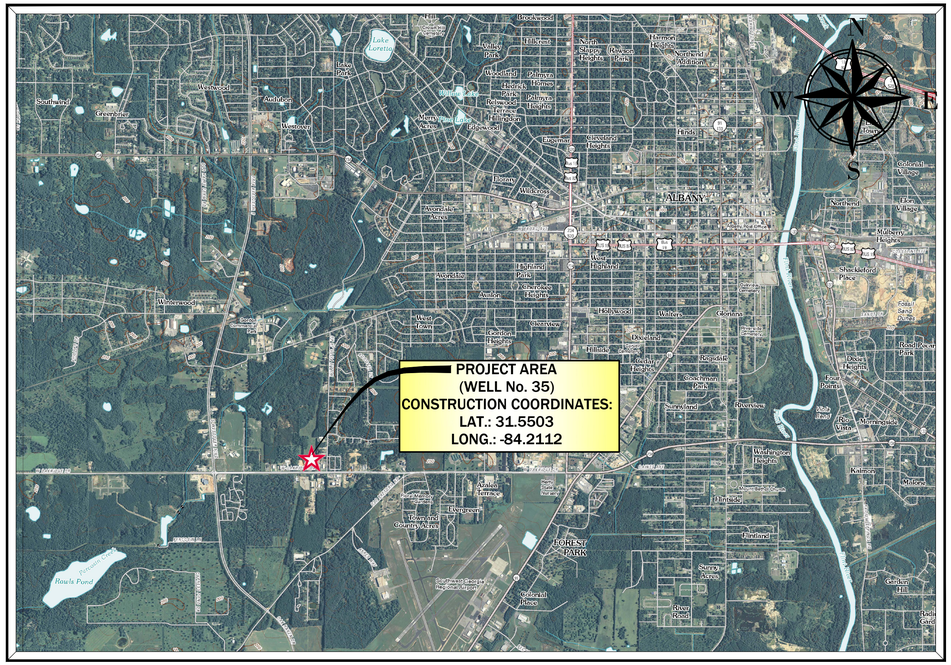

PROJECT LOCATION MAP

SCALE: 1" = 3000'

0 3000 6000

GRAPHIC SCALE IN FEET:
1" = 3000'

GEORGIA811
www.Georgia811.com
Know what's below.
Call before you dig.

OWNER/24-HOUR CONTACT INFO:

OWNER: CITY OF ALBANY
ATTN: DAVID APPERSON - WATER SYSTEM MANAGER
ADDRESS: P.O. BOX 1788
1726 LILLY POND ROAD
ALBANY, GA 31701
PHONE: (229) 883-8330
EMAIL: DAPPERSON@ALBANYGA.GOV

Revision	Date

STILL WATERS ENGINEERING
130 VETERINARY WAY, UNIT 2, LEESBURG, GA. 31763, 229.496.5700
WWW.STILLWATERSENG.COM

WELL NO. 35 UPGRADES
FOR THE
CITY OF ALBANY UTILITIES DIVISION
DOUGHERTY COUNTY, GEORGIA

GEORGIA REGISTERED PROFESSIONAL ENGINEER NO.30817 JAMES BRIAN HENDERSON

LEVEL II CERTIFIED DESIGN PROFESSIONAL, CERT. #13669
EXPIRES: 12/08/2027

Project No.	Date:
A1202.014	AUG 2025
Scale: AS SHOWN	Designed By: J.B.H.

SHEET #: 1 OF 6 SHEETS

GENERAL NOTES, ABBREVIATIONS & LOCATION MAP

EROSION, SEDIMENTATION & POLLUTION CONTROL NOTES:

1. PROJECT DESCRIPTION - THE PROPOSED PROJECT IS FOR WELL IMPROVEMENTS WITHIN AN AREA WITH AN EXISTING LAND USE CONSISTING OF GOVERNMENTAL .
2. OWNER -
   (NAME) CITY OF ALBANY
   (ADDRESS) P.O. BOX 1788
   1726 LILLY POND ROAD
   ALBANY, GA 31701
   (PHONE) (229) 883-8330
   (FAX)
   (EMAIL) DAPPERSON@ALBANYGA.GOV
3. PROJECT AREA - 1.15 ACRES
4. DISTURBED AREA - 0.05 ACRES
5. RUNOFF COEFFICIENT - THE ESTIMATED RUNOFF COEFFICIENT FOR THE PROJECT SITE PRIOR TO CONSTRUCTION IS 0.30 AFTER CONSTRUCTION IS COMPLETE THE ESTIMATED RUNOFF COEFFICIENT WILL BE 0.30.
6. PROJECT RECEIVING WATERS - THE RECEIVING WATERS FOR STORMWATER FROM THE PROJECT SITE IS UNNAMED TRIBUTARY OF PERCOSIN CREEK.
7. WETLANDS -
   IN OUR OPINION, THERE ARE NO JURISDICTIONAL WETLANDS LOCATED WITHIN 200 FEET OF THE PROJECT SITE.
   NO WETLANDS ARE EXPECTED TO BE IMPACTED BY THIS PROJECT.
8. STATE WATERS -
   IN OUR OPINION, THERE ARE NO STATE WATERS WITHIN 200 FEET OF THE PROJECT AREA.
9. STREAM BUFFERS - NON-EXEMPT ACTIVITIES SHALL NOT BE CONDUCTED WITHIN THE 25 OR 50-FOOT UNDISTURBED STREAM BUFFERS AS MEASURED FROM THE POINT OF WRESTED VEGETATION WITHOUT FIRST ACQUIRING THE NECESSARY VARIANCES AND PERMITS.
10. WASTE MATERIALS - WASTE MATERIALS SHALL NOT BE DISCHARGED TO WATERS OF THE STATE, EXCEPT AS AUTHORIZED BY A SECTION 404 PERMIT.
11. ESCAPE OF SEDIMENT - THE ESCAPE OF SEDIMENT FROM THE SITE SHALL BE PREVENTED BY THE INSTALLATION OF EROSION AND SEDIMENT CONTROL MEASURES AND PRACTICES PRIOR TO LAND DISTURBING ACTIVITIES.
12. MAINTENANCE - EROSION CONTROL MEASURES WILL BE MAINTAINED AT ALL TIMES. IF FULL IMPLEMENTATION OF THE APPROVED PLAN DOES NOT PROVIDE FOR EFFECTIVE EROSION CONTROL, ADDITIONAL EROSION AND SEDIMENT CONTROL MEASURES SHALL BE IMPLEMENTED TO CONTROL OR TREAT THE SEDIMENT SOURCE.
13. AMENDMENTS/REVISIONS TO THE ES&PC PLAN WHICH HAVE A SIGNIFICANT EFFECT ON BMPs WITH A HYDRAULIC COMPONENT MUST BE CERTIFIED BY THE DESIGN ENGINEER.
14. TEMPORARY STABILIZATION - ANY DISTURBED AREA LEFT EXPOSED FOR A PERIOD GREATER THAN 14 DAYS SHALL BE STABILIZED WITH MULCH OR TEMPORARY SEEDING
15. CONCRETE WASHOUT - WASHOUT OF THE DRUMS OF CONCRETE TRUCKS AT THE PROJECT SITE IS PROHIBITED. WASHDOWN OF CONCRETE TOOLS, CHUTES, HOPPERS, ETC. SHALL BE IN ACCORDANCE WITH THE US EPA PUBLICATION *STORMWATER BEST MANAGEMENT PRACTICE - CONCRETE WASHOUT*. A COPY OF THE PUBLICATION CAN BE OBTAINED BY VISITING HTTP://WATER.EPA.GOV/POLWASTE/NPDES/SWBMP/UPLOAD/CONCRETEWASHOUT.PDF
    OR WILL BE MADE AVAILABLE UPON REQUEST BY ENGINEER.
16. PETROLEUM STORAGE & SPILLS - ALL PETROLEUM BASED PRODUCTS, FUEL TANKS, & VEHICLES OR MACHINERY UTILIZING PETROLEUM BASED PRODUCTS SHALL BE STORED IN AN AREA AS FAR REMOVED AS POSSIBLE FROM STATE WATERS AND NATURAL OR MAN MADE DRAINAGE WAYS TO PREVENT CONTAMINATION OF SURFACE WATERS IN THE EVENT OF A SPILL. FUEL STORAGE TANKS SHALL BE EQUIPPED WITH A SECONDARY CONTAINMENT DEVICE TO MINIMIZE THE LIKELIHOOD OF A SPILL RESULTING IN CONTAMINATION. ALL USED PETROLEUM PRODUCTS RESULTING FROM VEHICLE/EQUIPMENT MAINTENANCE OR REPAIR SHALL BE DISPOSED OF IN ACCORDANCE WITH ALL FEDERAL, STATE, & LOCAL REGULATIONS.
    THE AREA WHERE PETROLEUM PRODUCTS, VEHICLES, & MACHINERY ARE STORED SHALL BE INSPECTED EACH DAY FOR SPILLS. PETROLEUM SPILLS SHALL BE CLEANED UP IMMEDIATELY AND REPORTED TO THE OWNER AND TO THE PROPER LOCAL, STATE, AND FEDERAL AUTHORITIES AS REQUIRED BY APPLICABLE REGULATIONS BASED ON LOCATION AND AMOUNT OF SPILL. SPILL CLEAN UP SHALL BE IN ACCORDANCE WITH ALL APPLICABLE REGULATIONS. MATERIALS AND EQUIPMENT NECESSARY FOR SPILL CLEAN UP SHALL BE KEPT ON THE PROJECT SITE AT ALL TIMES.
17. PRACTICES TO REDUCE POLLUTANTS IN STORM WATER DISCHARGE - CONCRETE, SEE ITEM 15. ABOVE. PETROLEUM PRODUCTS, SEE ITEM 16. ABOVE. **PAINT & PAINT PRODUCTS (THINNERS, SOLVENT**, ETC.) SHALL BE STORED IN SEALED ORIGINAL CONTAINERS IN AN AREA AS FAR AS POSSIBLE FROM STATE WATERS AND DRAINAGE WAYS. EXCESS PAINT & PAINT PRODUCTS SHOULD BE RETURNED TO ORIGINAL CONTAINERS. WATER OR SOLVENTS USED TO CLEAN PAINTING TOOLS OR EQUIPMENT SHALL BE CAPTURED, PLACED IN SEALED CONTAINERS, REMOVED FROM SITE AND DISPOSED OF IN A LAWFUL MANNER. UNDER NO CIRCUMSTANCES SHOULD PAINT OR PAINT PRODUCTS BE DISCHARGED ONTO THE GROUND OR INTO A STORM WATER CONVEYANCE OR WATERWAY. AGRICULTURAL CHEMICALS (FERTILIZERS, HERBICIDES, PESTICIDES, ETC.) - ALL AGRICULTURAL CHEMICALS OR OTHER POTENTIALLY HAZARDOUS CHEMICALS SHALL BE STORED IN SEALED ORIGINAL CONTAINERS IN AN AREA AS FAR AS POSSIBLE FROM STATE WATERS AND DRAINAGE WAYS. ALL CHEMICALS SHALL BE APPLIED AS PER MANUFACTURER'S RECOMMENDED APPLICATION RATES AND IN ACCORDANCE WITH ALL APPLICABLE LAWS AND REGULATIONS. CONSTRUCTION WASTE/REFUSE - ALL CONSTRUCTION WASTE SHALL BE DISCARDED IN A CONTAINER DESIGNED FOR STORAGE OF WASTE/REFUSE. CONTAINER SHALL BE EMPTIED AND WASTE HAULED OFF SITE PRIOR TO CONTAINER REACHING FULL CAPACITY. DISPOSAL OF WASTE SHALL BE IN ACCORDANCE WITH ALL STATE AND LOCAL REGULATIONS. WASTE CONTAINER LOCATION SHALL BE AS FAR AS POSSIBLE AWAY FROM STATE WATERS AND DRAINAGE WAYS. UNDER NO CIRCUMSTANCES SHALL WASTE/REFUSE BE BURIED ON THE PROJECT SITE.
19. BUILDING MATERIALS - PLASTIC SHEATHING AND/OR TEMPORARY ROOFS SHALL BE INSTALLED TO COVER BUILDING MATERIALS, CONSTRUCTION WASTE, TRASH, LANDSCAPE MATERIALS, DETERGENTS, SANITARY WASTE AND OTHER MATERIALS REQUIRED IN THIS PERMIT TO MINIMIZE EXPOSURE TO PRECIPITATION AND STORMWATER.
20. EROSION CONTROL PROGRAM: CLEARING SHALL BE KEPT TO AN ABSOLUTE MINIMUM. VEGETATION AND MULCH WILL BE APPLIED TO DISTURBED AREAS IMMEDIATELY AFTER INSTALLATION OF PROPOSED IMPROVEMENTS. PAVING SHALL BE CONSTRUCTED IN APPLICABLE AREAS. LAND DISTURBING ACTIVITIES SHALL BE SCHEDULED TO LIMIT EXPOSURE OF BARE SOILS TO EROSIVE ELEMENTS.
21. SEDIMENT CONTROL PROGRAM: SEDIMENT CONTROL SHALL BE ACCOMPLISHED BY THE INSTALLATION OF SILT FENCE, TEMPORARY AND PERMANENT GRASSING AND OTHER EROSION CONTROL MEASURES.
22. SEDIMENT STORAGE: SEDIMENT STORAGE SHALL BE ACHIEVED WITH SILT FENCE. TOTAL REQUIRED SEDIMENT STORAGE VOLUME IS 0.05 ACRES * 67 CY/AC = 3.35 CY.
23. STANDARDS AND SPECIFICATIONS: ALL DESIGNS SHALL CONFORM TO, AND ALL WORK SHALL BE IN ACCORDANCE WITH, THE "MANUAL FOR EROSION AND SEDIMENT CONTROL IN GEORGIA", LATEST EDITION.
24. SAFETY PROTECTION: CONSTRUCTION ACTIVITIES SHALL BE IN ACCORDANCE WITH ALL APPLICABLE RULES AND REGULATIONS.
25. MAINTENANCE PROGRAM: EROSION AND SEDIMENT CONTROL MEASURES SHALL BE INSPECTED DAILY. ANY DAMAGES OBSERVED SHALL BE REPAIRED BY THE END OF THAT DAY. CLEAN OUT OF SEDIMENT CONTROL STRUCTURES SHALL BE ACCOMPLISHED BY SPREADING SEDIMENT ON SITE. SEDIMENT BARRIERS WILL REMAIN IN PLACE UNTIL SEDIMENT CONTRIBUTING AREAS ARE STABILIZED. THE TEMPORARY BARRIERS WILL THEN BE REMOVED AND THE AREAS OCCUPIED BY THESE STRUCTURES

EROSION, SEDIMENTATION & POLLUTION CONTROL NOTES:

WILL BE VEGETATED.

26. EROSION CONTROL MEASURES SHOWN ON THE DRAWINGS ARE MINIMUM REQUIREMENTS. ADDITIONAL EROSION CONTROL MEASURES SHALL BE EMPLOYED BY THE CONTRACTOR WHERE DETERMINED NECESSARY BY LOCAL AUTHORITIES OR THE ENGINEER BASED UPON ACTUAL SITE CONDITIONS.
27. EROSION CONTROL MEASURES MAY HAVE TO BE ALTERED FROM THAT SHOWN ON THE PLANS IF DRAINAGE PATTERNS DURING CONSTRUCTION ARE DIFFERENT FROM THE DRAINAGE PATTERNS SHOWN ON THE PLANS. IT IS THE CONTRACTOR'S RESPONSIBILITY TO ACCOMPLISH EROSION CONTROL FOR ALL DRAINAGE PATTERNS CREATED AT VARIOUS STAGES DURING CONSTRUCTION.
28. IF FINES OR PENALTIES ARE LEVIED AGAINST THE PROPERTY OR THE PROPERTY OWNER BECAUSE OF A LACK OF EROSION OR SEDIMENTATION CONTROL, THE CONTRACTOR SHALL BE RESPONSIBLE FOR PAYMENT OF SUCH FINES OR PENALTIES, OR THE COST OF SUCH FINES OR PENALTIES SHALL BE DEDUCTED FROM THE CONTRACT AMOUNT.
29. THE CONTRACTOR SHALL BE RESPONSIBLE FOR MAINTAINING EROSION CONTROL MEASURES AT ALL TIMES DURING CONSTRUCTION. STORM DRAINAGE SYSTEMS SHALL BE KEPT CLEAN AND FREE OF SILT AND DEBRIS.
30. PRIOR TO COMMENCING LAND DISTURBANCE ACTIVITY, THE LIMITS OF LAND DISTURBANCE SHALL BE CLEARLY AND ACCURATELY MARKED WITH STAKES, RIBBONS, OR OTHER APPROPRIATE MEANS. THE LOCATION AND EXTENT OF ALL AUTHORIZED LAND DISTURBANCE ACTIVITY SHALL BE MARKED FOR THE DURATION OF THE CONSTRUCTION ACTIVITY. NO DISTURBANCE ACTIVITY SHALL OCCUR OUTSIDE THE LIMITS INDICATED ON THE PLANS.
31. THE CONSTRUCTION OF THE SITE WILL INITIATE WITH INSTALLATION OF EROSION CONTROL MEASURES SUFFICIENT TO CONTROL SEDIMENT DEPOSITS AND EROSIONS. ALL SEDIMENT CONTROL WILL BE MAINTAINED UNTIL ALL UPSTREAM GROUND WITHIN THE CONSTRUCTION AREA HAS BEEN COMPLETELY STABILIZED WITH PERMANENT VEGETATION AND ALL ROADS AND/OR PARKING AREAS HAVE BEEN PAVED.
32. THE CONTRACTOR SHALL INSPECT AND REPAIR EROSION CONTROL MEASURES AT LEAST DAILY AND FOLLOWING EACH RAINFALL.
33. THE CONTRACTOR SHALL NOT ALLOW SILT TO ACCUMULATE IN SILT FENCE ABOVE ONE-HALF OF THE ORIGINAL HEIGHT OF THE SILT FENCE. THE CONTRACTOR SHALL REMOVE SILT AS NEEDED TO PREVENT EXCESS ACCUMULATION.
34. ALL AREAS TO BE PAVED SHALL BE STABILIZED WITH BASE MATERIAL AS SOON AS PRACTICAL. TEMPORARY VEGETATIVE STABILIZATION, OUTSIDE OF PAVED AREAS, SHALL BE PROVIDED IMMEDIATELY AFTER REACHING FINAL GRADE.
35. PERMANENT VEGETATION SHALL BE PROVIDED AT THE EARLIEST SUITABLE GROWING SEASON, AND AS SOON AS IS PRACTICAL FOLLOWING FINAL GRADING.
36. TEMPORARY MULCHING SHALL BE EMPLOYED TO PROTECT CRITICAL AREAS DURING CONSTRUCTION.
37. MEASURES THAT SHALL BE INSTALLED DURING CONSTRUCTION TO CONTROL POLLUTANTS THAT WILL OCCUR AFTER CONSTRUCTION HAS BEEN COMPLETED:
    a. PERMANENT VEGETATION
36. THE BMP'S AND EROSION CONTROL MEASURES OF THIS PLAN SHALL COINCIDE WITH THE REGULATIONS OF LOCAL GOVERNING MUNICIPALITY REGARDING WASTE DISPOSAL, SANITARY SEWER, AND SEPTIC TANK REGULATIONS.
37. IN UNPAVED AREAS OF WATERLINE CONSTRUCTION, CONTRACTOR SHALL IMMEDIATELY INSTALL VEGETATION AND ANCHOR MULCH AFTER WATER LINE INSTALLATION. NO DISTURBED AREAS SHALL BE LEFT EXPOSED FOR MORE THAN 24 HOURS.
38. MINIMIZING WIND EROSION AND CONTROLLING DUST WILL BE ACCOMPLISHED BY ONE OR MORE OF THE FOLLOWING METHODS:
    A. COVERING 30% OR MORE OF THE SOIL SURFACE WITH NON-ERODIBLE MATERIAL
    B. ROUGHENING THE SOIL TO PRODUCE RIDGES PERPENDICULAR TO THE PREVAILING WIND.
    C. FREQUENT WATERING OF EXCAVATION AND FILL AREAS
    D. PROVIDING GRAVEL OR PAVING AT ENTRANCE / EXIT DRIVES

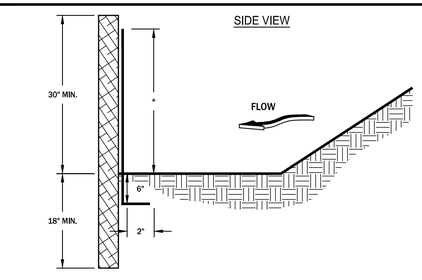

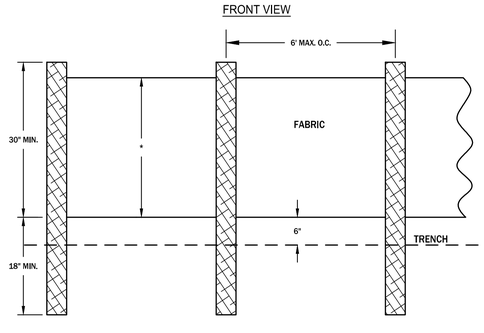

NOTES:
1. USE STEEL OR WOOD POSTS OR AS SPECIFIED BY THE EROSION, SEDIMENTATION, AND POLLUTION CONTROL PLAN.
2. HEIGHT (*) IS TO BE SHOWN ON THE EROSION, SEDIMENTATION, AND POLLUTION CONTROL PLAN.

Sd1-NS SILT FENCE "TYPE A"

FERTILIZER REQUIREMENTS

Type of Species	Planting Year	Fertilizer (N-P-K)	Rate (lbs./acre)	Nitrogen Top Dressing Rate (lbs./acre)
Cool Season Grasses	First Second Maintenance	6-12-12 6-12-12 10-10-10	1500 1000 400	50-100 - 30
Warm Season Grasses	First Second Maintenance	6-12-12 6-12-12 10-10-10	1500 800 400	50-100 50-100 30

GEORGIA
UNIFORM CODING SYSTEM
FOR SOIL EROSION AND SEDIMENT CONTROL PRACTICES
GEORGIA SOIL AND WATER CONSERVATION COMMISSION
INITIAL EROSION CONTROL MEASURES
STRUCTURAL PRACTICES

CODE	PRACTICE	DETAIL	MAP SYMBOL	DESCRIPTION
Sd1	*SEDIMENT BARRIER*		(INDICATE TYPE)	*A barrier to prevent sediment from leaving the construction site. It may be sandbags, bales of straw or hay, brush, logs and poles, gravel, or a silt fence.*

GEORGIA
UNIFORM CODING SYSTEM
FOR SOIL EROSION AND SEDIMENT CONTROL PRACTICES
GEORGIA SOIL AND WATER CONSERVATION COMMISSION
INTERMEDIATE EROSION CONTROL MEASURES
STRUCTURAL PRACTICES

CODE	PRACTICE	DETAIL	MAP SYMBOL	DESCRIPTION
Sd1	*SEDIMENT BARRIER*		(INDICATE TYPE)	*A barrier to prevent sediment from leaving the construction site. It may be sandbags, bales of straw or hay, brush, logs and poles, gravel, or a silt fence.*

VEGETATIVE PRACTICES

CODE	PRACTICE	DETAIL	MAP SYMBOL	DESCRIPTION
Ds1	*DISTURBED AREA STABILIZATION (WITH MULCHING ONLY)*		Ds1	*Establishing temporary protection for disturbed areas where seedlings may not have a suitable growing season to produce an erosion retarding cover.*
Ds2	*DISTURBED AREA STABILIZATION (WITH TEMP SEEDING)*		Ds2	*Establishing a temporary vegetative cover with fast growing seedings on disturbed areas.*
Ds3	*DISTURBED AREA STABILIZATION (WITH PERM SEEDING)*		Ds3	*Establishing a permanent vegetative cover such as trees, shrubs, vines, grasses, or legumes on disturbed areas.*
Du	*DUST CONTROL ON DISTURBED AREAS*		Du	*Controlling surface and air movement of dust on construction site, roadways and similar sites.*

GEORGIA
UNIFORM CODING SYSTEM
FOR SOIL EROSION AND SEDIMENT CONTROL PRACTICES
GEORGIA SOIL AND WATER CONSERVATION COMMISSION
FINAL EROSION CONTROL MEASURES
VEGETATIVE PRACTICES

CODE	PRACTICE	DETAIL	MAP SYMBOL	DESCRIPTION
Ds3	*DISTURBED AREA STABILIZATION (WITH PERM SEEDING)*		Ds3	*Establishing a permanent vegetative cover such as trees, shrubs, vines, grasses, or legumes on disturbed areas.*

SEEDING RATES FOR TEMPORARY SEEDING

SPECIES	RATE Per 1,000 sq. ft.	RATE Per Acre*	PLANTING DATES**
Rye	3.9 pounds	3 bu.	Sep. 1 - Mar. 1
Ryegrass	0.9 pounds	40 lbs.	Aug. 15 - Apr. 1
Annual Lespedeza	0.9 pounds	40 lbs.	Jan. 15 - Mar. 15
Weeping Lovegrass	0.1 pounds	4 lbs.	Feb. 15 - Jun. 15
Sudangrass	1.4 pounds	60 lbs.	Mar. 1 - Aug. 1
Browntop Millet	0.9 pounds	40 lbs.	Apr. 1 - Jul. 15
Wheat	4.1 pounds	3 bu.	Sep. 15 - Feb. 1

* Unusual site conditions may require heavier seeding rates
** Seeding dates may need to be altered to fit temperture variations and conditions.

SEEDING RATES FOR PERMANENT SEEDING

SPECIES	RATE Per 1,000 sq. ft.	RATE Per Acre*	PLANTING DATES**
Bahia	1.4 pounds	60 lbs.	Jan. 1 - Dec. 31
Bermuda	0.2 pounds	10 lbs.	Feb. 15 - Jul. 1
Centipede	Block Sod Only	Block Sod Only	Apr. 1 - Jul. 1
Lespedeza	1.7 pounds	75 lbs.	Jan. 1 - Dec. 31
Weeping Lovegrass	0.1 pounds	4 lbs.	Feb. 1 - Jun. 15
Switch Grass	0.9 pounds	40 lbs.	Mar. 15 - Jun. 1

* Unusual site conditions may require heavier seeding rates
** Seeding dates may need to be altered to fit temperture variations and conditions.

GEORGIA811
www.Georgia811.com
Know what's below. Call before you dig.

OWNER/24-HOUR CONTACT INFO:
OWNER: CITY OF ALBANY
ATTN: DAVID APPERSON - WATER SYSTEM MANAGER
ADDRESS: P.O. BOX 1788
1726 LILLY POND ROAD
ALBANY, GA 31701
PHONE: (229) 883-8330
EMAIL: DAPPERSON@ALBANYGA.GOV

EROSION, SEDIMENTATION AND POLLUTION CONTROL NOTES

Revision	Date

STILL WATERS ENGINEERING
130 VETERINARY WAY, UNIT 2, LEESBURG, GA. 31763, 229.496.5700
WWW.STILLWATERSENG.COM

WELL NO. 35 UPGRADES
FOR THE
CITY OF ALBANY UTILITIES DIVISION
DOUGHERTY COUNTY, GEORGIA

GEORGIA REGISTERED NO.30817 PROFESSIONAL ENGINEER JAMES BRIAN HENDERSON
LEVEL II CERTIFIED DESIGN PROFESSIONAL, CERT. #13669
EXPIRES: 12/08/2027

Project No. A1202.014	Date: AUG 2025
Scale: AS SHOWN	Designed By: J.B.H.

SHEET #: 2 OF 6 SHEETS

SOIL INFORMATION	
MAP UNIT SYMBOL	MAP UNIT NAMES
RgA	Red Bay loamy sand, 0 to 2 percent slopes
RgB2	Red Bay loamy sand, 2 to 5 percent slopes, eroded

GENERAL NOTES:

1. EXISTING CONDITIONS SHOWN TO PROVIDE CONTRACTOR WITH GENERAL SITE LAYOUT. NO DRAWINGS OF EXISTING UNDERGROUND UTILITIES ARE AVAILABLE AND THEREFORE UNDERGROUND UTILITIES ARE GENERALLY NOT SHOWN. IN ADDITION TO CALLING 811, CONTRACTOR SHALL DIRECTLY COORDINATE WITH CITY OF ALBANY PERSONNEL ON SITE FOR LOCATION OF UNDERGROUND UTILITIES IF ANY LAND DISTURBANCE ACTIVITIES ARE REQUIRED.

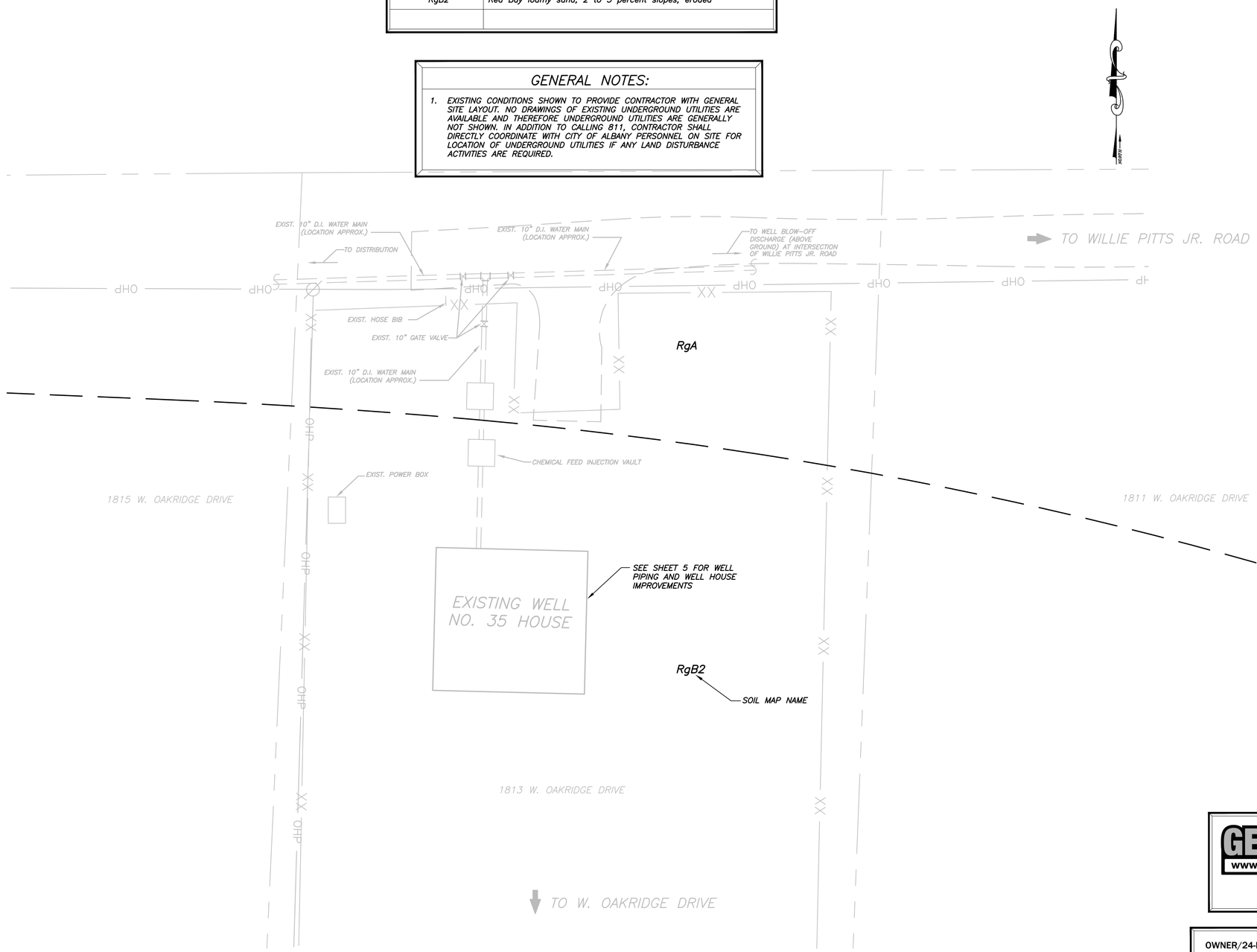

WELL NO. 35 – EXISTING SITE PLAN

0 10 20

GRAPHIC SCALE IN FEET:
1" = 10'

GEORGIA811
www.Georgia811.com
Know what's below. Call before you dig.

OWNER/24-HOUR CONTACT INFO:

OWNER: CITY OF ALBANY
ATTN: DAVID APPERSON - WATER SYSTEM MANAGER
ADDRESS: P.O. BOX 1788
1726 LILLY POND ROAD
ALBANY, GA 31701
PHONE: (229) 883-8330
EMAIL: DAPPERSON@ALBANYGA.GOV

WELL NO. 35 - EXISTING SITE PLAN

Revision	Date

STILL WATERS ENGINEERING
130 VETERINARY WAY UNIT 2, LEESBURG, GA. 31763, 229.496.5700
WWW.STILLWATERSENG.COM

WELL NO. 35 UPGRADES
FOR THE
CITY OF ALBANY UTILITIES DIVISION
DOUGHERTY COUNTY, GEORGIA

GEORGIA REGISTERED NO.30817 PROFESSIONAL ENGINEER JAMES BRIAN HENDERSON

LEVEL II CERTIFIED DESIGN PROFESSIONAL, CERT. #13669
EXPIRES: 12/08/2027

Project No.	Date:
A1202.014	AUG 2025
Scale:	Designed By:
AS SHOWN	J.B.H.

SHEET #:
3
OF 6 SHEETS

GENERAL CONSTRUCTION NOTES:

1. DRAWING IS SCHEMATIC AND NOT TO EXACT SCALE. CONTRACTOR SHALL FIELD VERIFY ALL MEASUREMENTS PRIOR TO CONSTRUCTION.
2. ALL FITTING & VALVES REMOVED BY CONTRACTOR SHALL REMAIN THE PROPERTY OF THE CITY OF ALBANY UNLESS SPECIFICALLY DIRECTED OTHERWISE. IF DIRECTED BY CITY, CONTRACTOR SHALL BE RESPONSIBLE FOR PROPER DISPOSAL.
3. CONTRACTOR SHALL PROPERLY DISPOSE OF ALL DUCTILE IRON PIPE REMOVED.
4. SEE ELECTRICAL PLANS SHEETS FOR DETAILED INFORMATION ON REMOVAL OF EXISTING ELECTRICAL COMPONENTS.
5. CONTRACTOR SHALL PULL THE VERTICAL TURBINE WELL PUMP AND RECORD MANUFACTURES NAME, MODEL NUMBER, SERIAL NUMBER, ETC. CONTRACTOR SHALL CONTACT PUMP MANUFACTURER OR AUTHORIZED SALES REPRESENTATIVE AND PROVIDE INFORMATION NECESSARY TO OBTAIN A PUMP CURVE AND DUTY POINT IF AVAILABLE ON RECORD.
6. CONTRACTOR SHALL TEST PUMP THE WELL TO DETERMINE THE SAFE YIELD, STATIC WATER LEVEL, PUMPING WATER LEVEL, AND RECOVERY PERIOD. TEST PUMPING SHALL CONTINUE UNTIL WELL YIELD AND PUMPING WATER LEVEL HAS STABILIZED FOR A MINIMUM OF 2 HOURS.
7. THE WORK DETAILED IN NOTES 5–6 ON THIS SHEET SHALL BE COMPLETED PRIOR TO THE INITIATION OF ANY OF THE PROPOSED IMPROVEMENTS ON SHEET 5 (INCLUDING THE PURCHASE OF MATERIALS) IN CASE ANY REVISIONS TO THE SCOPE OF WORK ARE REQUIRED BASED ON THE PUMP TEST RESULTS.

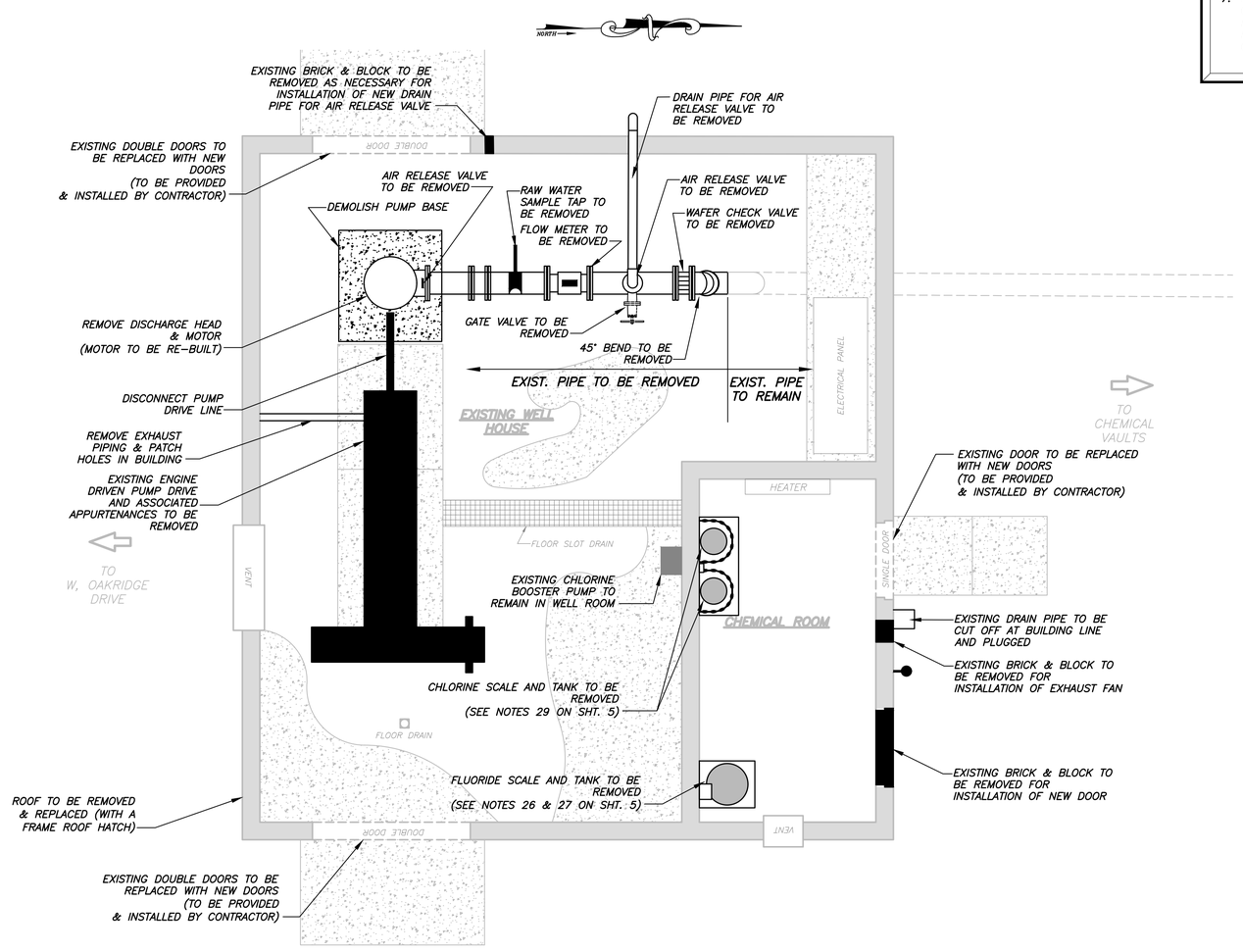

GEORGIA811
www.Georgia811.com
Know what's below. Call before you dig.

OWNER/24-HOUR CONTACT INFO:

OWNER: CITY OF ALBANY
ATTN: DAVID APPERSON - WATER SYSTEM MANAGER
ADDRESS: P.O. BOX 1788
1726 LILLY POND ROAD
ALBANY, GA 31701
PHONE: (229) 883-8330
EMAIL: DAPPERSON@ALBANYGA.GOV

WELL NO. 35 - DEMOLITION PLAN

Revision	Date

STILL WATERS ENGINEERING
130 VETERINARY WAY UNIT 2, LEESBURG, GA. 31763, 229.496.6700
WWW.STILLWATERSENG.COM

WELL NO. 35 UPGRADES
FOR THE
CITY OF ALBANY UTILITIES DIVISION
DOUGHERTY COUNTY, GEORGIA

GEORGIA REGISTERED NO. 30817 PROFESSIONAL ENGINEER JAMES BRIAN HENDERSON

LEVEL II CERTIFIED DESIGN PROFESSIONAL, CERT. #13669
EXPIRES: 12/08/2027

Project No.	Date:
A1202.014	AUG 2025
Scale:	Designed By:
AS SHOWN	J.B.H.

SHEET #: 4 OF 6 SHEETS

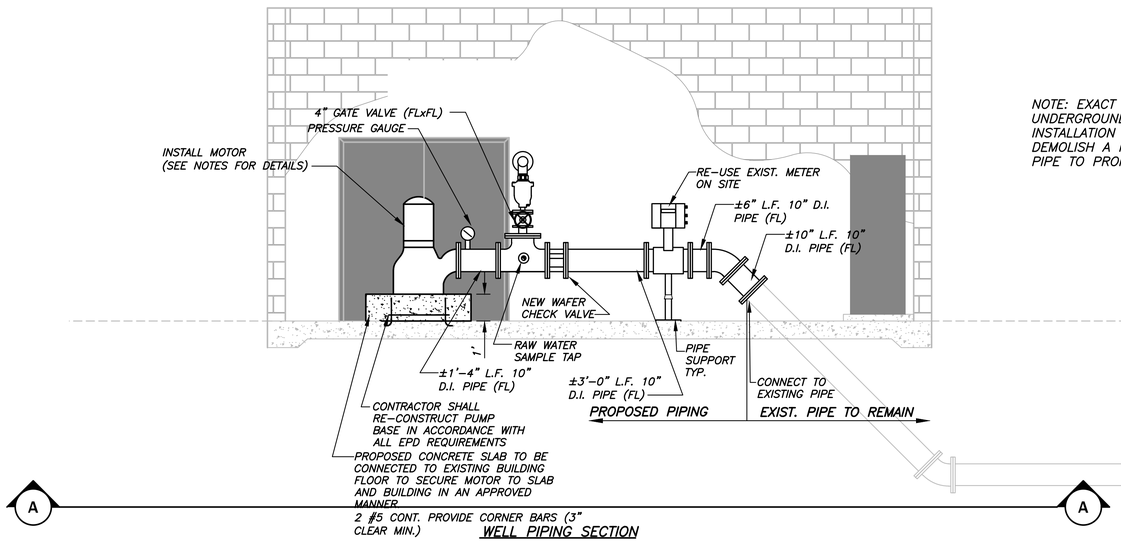

WELL PIPING SECTION

NOTE: EXACT DEPTH AND ORIENTATION/LAYOUT OF UNDERGROUND PIPING IS NOT KNOWN. INSTALLATION MAY REQUIRE CONTRACTOR TO DEMOLISH A PORTION OF THE SLAB AND EXCAVATE PIPE TO PROPERLY FIT THE EXISTING LAYOUT.

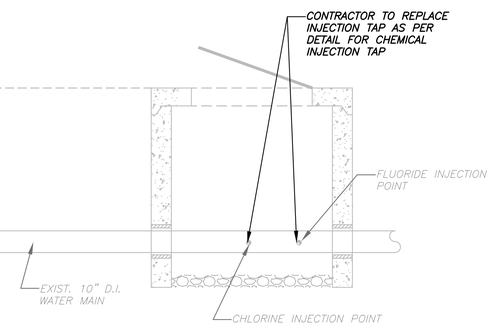

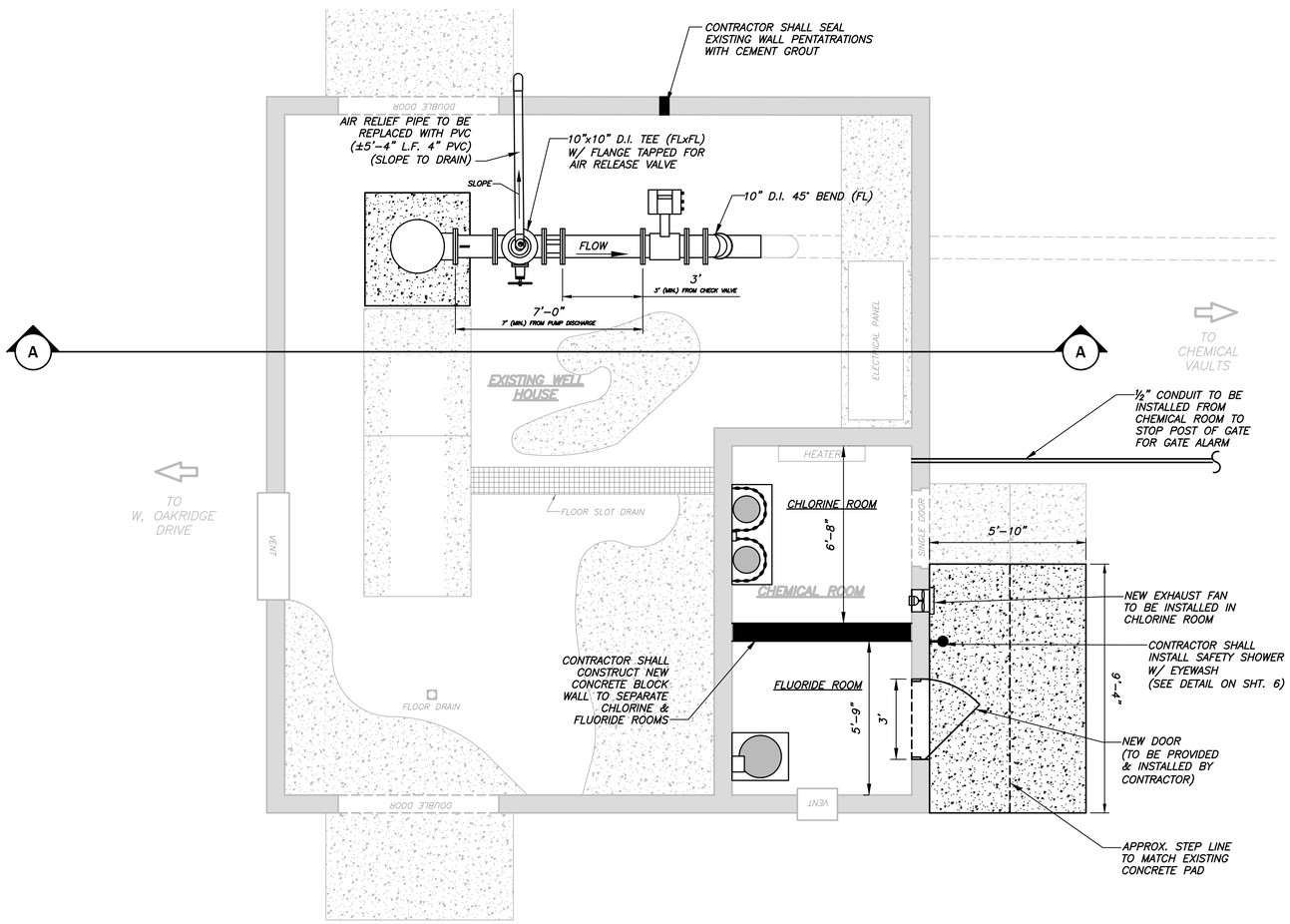

GEORGIA811
www.Georgia811.com
Know what's below. Call before you dig.

OWNER/24-HOUR CONTACT INFO:

OWNER: CITY OF ALBANY

ATTN: DAVID APPERSON - WATER SYSTEM MANAGER

ADDRESS: P.O. BOX 1788
1726 LILLY POND ROAD
ALBANY, GA 31701

PHONE: (229) 883-8330

EMAIL: DAPPERSON@ALBANYGA.GOV

GENERAL CONSTRUCTION NOTES:

1. DRAWING IS SCHEMATIC AND NOT TO EXACT SCALE. CONTRACTOR SHALL FIELD VERIFY ALL MEASUREMENTS PRIOR TO CONSTRUCTION. DIMENSIONS SHOWN ARE APPROXIMATE.
2. NEW WELL PUMP TO BE GOULDS OR APPROVED EQUAL. PROPOSED PUMP DUTY POINT TO MATCH EXISTING WELL PUMP. CITY RECORDS ARE INCOMPLETE AND NO RECORD OF PUMP MODEL NUMBER, DUTY POINT ETC. ARE AVAILABLE. CONTRACTOR SHALL PULL PUMP AND RECORD SERIAL NUMBER LOCATED ON PUMP BOWL AND COORDINATE WITH MANUFACTURER TO OBTAIN PUMP MODEL NUMBER, DUTY POINT, AND OTHER RELEVANT INFORMATION. NEW WELL PUMP SHALL MATCH PERFORMANCE OF EXISTING PUMP. ONCE EXIST. PUMP INFORMATION IS OBTAINED, CONTRACTOR SHALL PROVIDE MODEL NUMBER, DUTY POINT AND OTHER RELEVANT INFORMATION TO THE CITY PRIOR TO ORDERING A NEW PUMP.
3. CONTRACTOR MUST HAVE PUMP MOTOR RE-BUILT BY DEESE SERVICES. CONTRACTOR TO RE-USE EXIST. PUMP DISCHARGE HEAD. DISCHARGE HEAD SHALL BE BLASTED & RE-COATED WITH EPOXY AND STUFFING BOX RE-BUILT.
4. CONTRACTOR SHALL EXTEND CASING AS REQUIRED AND RE-CONSTRUCT PUMP BASE TO MEET EPD REQUIREMENTS. CONCRETE BASE SHALL EXTEND A MINIMUM OF 12" ABOVE SURROUNDING BASE SLAB. NEW PUMP BASE SHALL BE ANCHORED TO EXISTING CONCRETE SLAB FLOOR.
5. CONTRACTOR SHALL CORE NEW OPENINGS IN WALL, AS NECESSARY, FOR PIPE PENETRATIONS TO MATCH PROPOSED DISCHARGE ELEVATIONS BASED ON RE-CONSTRUCTED PUMP BASE ELEVATION. ANY EXISTING OPENINGS THAT WILL NO LONGER BE REQUIRED SHALL BE GROUT FILLED.
6. CONTRACTOR SHALL SEPARATE CHLORINE AND FLUORIDE ROOMS WITH NEW CONCRETE BLOCK WALL AND INSTALL A NEW EXTERIOR DOOR FOR FLUORIDE ROOM AND VENTILATION FOR CHLORINE ROOM. EQUIPMENT TO BE REPLACED EXCEPT FOR CHLORINE BOOSTER PUMP.
7. SEE SHEETS E-1 THROUGH E-9 FOR ELECTRICAL PLANS.
8. NEW WAFER CHECK VALVE TO BE MODEL CV 41A-DI BY TITAN FLOW CONTROL, INC OR APPROVED EQUAL. NSF61 APPROVED MODEL FOR POTABLE WATER USE REQUIRED
9. TO THE EXTENT POSSIBLE AS SPACE PERMITS, MAINTAIN 2' MIN. CLEARANCE DOWNSTREAM BETWEEN FLOW METER AND FITTINGS. MAINTAIN 3' MIN. CLEARANCE UPSTREAM BETWEEN METER AND CHECK VALVE AND 7' MIN. CLEARANCE BETWEEN METER & PUMP DISCHARGE.
10. CONTRACTOR SHALL RE-USE EXISTING METER.
11. THE WELL CASING SHALL BE VENTED BY A SCREEN RISER SO THAT THE SCREEN OPENING TERMINATES DOWNWARD AND ABOVE ANY POINT OF BACKFLOW CONTAMINATIONS INTO THE WELL, IN ACCORDANCE WITH THE GEORGIA EPD DRINKING WATER PERMITTING & ENGINEERING PROGRAM'S MINIMUM STANDARDS FOR PUBLIC WATER SYSTEMS, LATEST EDITION.
12. WELL SHALL BE EQUIPPED WITH AN AIR LINE FOR THE MEASUREMENT OF STATIC & PUMPING WATER LEVELS. AIR LINE MUST BE (3/16" MINIMUM DIAMETER) CONTINUOUS STAINLESS STEEL PVC COATED LINE.
13. DOOR TO FLUORIDE FEED ROOM SHALL BE EPOXY COATED METAL AND PROVIDED WITH A TAMPER FREE GLASS WINDOW TO PERMIT VIEWING OF THE ROOM AND EQUIPMENT. FLUORIDE FEED ROOM DOOR SHALL ALSO BE EQUIPPED WITH PANIC HARDWARE AND OPEN TO THE BUILDING EXTERIOR. DOOR & HARDWARE SHALL BE CHEMICAL/CORROSION RESISTANT.
14. ALL DOORS TO BE METAL DOORS WITH TAMPER FREE GLASS AND PANIC BAR. PROVIDED WITH LOCKS TO PREVENT UNAUTHORIZED ENTRY. ALL HARDWARE TO BE 316 STAINLESS STEEL.
15. REMOVE AND REPLACE ALL EXHAUST FANS IN WELL ROOM, CHLORINE ROOM, AND FLUORIDE ROOM WITH FANS WITH ADJUSTABLE THERMOSTATS. LOUVERS CLOSE TO CEILING.
16. CHLORINE FEED ROOM SHALL HAVE A VENTILATING FAN WITH A CAPACITY WHICH PROVIDES ONE COMPLETE AIR CHANGE PER MINUTE WHEN THE ROOM IS OCCUPIED.
17. THE AIR OUTLET FROM THE CHLORINE FEED ROOM SHALL BE NEAR THE FLOOR LEVEL AND THE POINT OF DISCHARGE SHALL BE SO LOCATED AS NOT TO CONTAMINATE AIR INLETS TO ANY ROOMS OR STRUCTURES, OR ADVERSELY AFFECT THE SURROUNDING ENVIRONMENT.
18. AIR INLETS SHOULD BE THROUGH LOUVERS NEAR THE CEILING, AND TEMPERATURE CONTROLLED TO PREVENT ADVERSE AFFECT ON CHLORINATOR.
19. LOUVERS FOR CHLORINE ROOM AIR INTAKE AND EXHAUST FAN SHALL FACILITATE AIRTIGHT CLOSURE.
20. SEPARATE SWITCHES FOR THE FAN AND LIGHTS SHALL BE LOCATED OUTSIDE OF CHLORINE ROOM, AT THE ENTRANCE. THE EXHAUST FAN SHOULD AUTOMATICALLY BE ACTIVATED WHEN THE DOOR IS OPENED.
21. VENTS FROM FEEDERS AND STORAGE SHALL DISCHARGE TO THE OUTSIDE ATMOSPHERE, ABOVE GRADE.
22. PROVIDE HEATER WITH ADJUSTABLE THERMOSTAT SIZED CAPABLE OF MAINTAINING CHLORINE FEED ROOM AT 60° F YEAR ROUND.
23. INSTALL CHLORINE GAS DETECTOR WITH AUDIBLE ALARM AS DETAILED IN THE SPECIFICATIONS IN THE CHLORINE FEED ROOM AS PER MANUFACTURER RECOMMENDATIONS.
24. PROVIDE LIGHTS AND LIGHT SWITCHES FOR EACH ROOM.
25. CHLORINE ROOM SHALL BE COMPLETELY SEALED OFF AIRTIGHT FROM THE ELECTRICAL ROOM.
26. NEW FLUORIDE SCALES. SCALES MUST BE FORCEFLOW MODEL# 8D10DS.
27. NEW FLUORIDE TANK. TANK MUST BE A DOUBLED WALL 65 GALLON TANK.
28. REMOVE AND REPLACE FLUORIDE PUMP. NEW PUMP MUST BE NEPTUNE MODEL# PZ-31-VEC-F.
29. NEW CHLORINE SCALES. NEW SCALES MUST BE FORCEFLOW MODEL# WR150-2.
30. REMOVE AND REPLACE CHLORINE BOOSTER PUMP. NEW BOOSTER PUMP MUST BE WEBTROL MODEL# G10B123.
31. REMOVE AND REPLACE CHLORINE EJECTOR. NEW EJECTOR MUST BE HYDRO EJECTOR MODEL# EJ1000 # 3 NOZZLE.
32. REMOVE AND REPLACE CHLORINE FEED BUILDING EQUIPMENT FROM INJECTION POINT TO EQUIPMENT.
33. PRIOR TO ORDERING NEW PUMP EQUIPMENT, CONTRACTOR SHALL PULL EXISTING PUMP RECORD SERIAL NUMBER FOUND ON BOWL. CONTRACTOR SHALL COORDINATE WITH PUMP MANUFACTURER TO VERIFY MODEL NO. AND PUMP CURVE DATA.
34. EXISTING ROOF FOR WELL HOUSE TO BE REPLACED. CONTRACTOR TO PROVIDE AND INSTALL WINDSOCK ON CHEMICAL FEED BUILDING. CONTRACTOR IS TO PROVIDE AND INSTALL AMERICAN AIRPORT CORPORATION 10" X 36" AVIATION QUALITY WINDSOCK AND FRAME.
35. ONCE ALL WORK HAS BEEN COMPLETED CONTRACTOR SHALL CONDUCT PERFORMANCE TESTING AS REQUIRED BY SPECIFICATIONS.
36. CONTRACTOR SHALL DISINFECT WELL & NEW PIPING AND PROVIDE ACCEPTABLE BACTERIOLOGICAL SAMPLE RESULTS PRIOR TO PLACING WELL BACK IN SERVICE.

WELL NO. 35 - PROPOSED IMPROVEMENTS

Revision	Date

STILL WATERS ENGINEERING
130 VETERINARY WAY UNIT 2, LEESBURG, GA. 31763, 229.496.6700
WWW.STILLWATERSENG.COM

WELL NO. 35 UPGRADES
FOR THE
CITY OF ALBANY UTILITIES DIVISION
DOUGHERTY COUNTY, GEORGIA

GEORGIA REGISTERED NO. 30817 PROFESSIONAL ENGINEER JAMES BRIAN HENDERSON

LEVEL II CERTIFIED DESIGN PROFESSIONAL, CERT. #13669
EXPIRES: 12/08/2027

Project No.	Date:
A1202.014	AUG 2025
Scale:	Designed By:
AS SHOWN	J.B.H.

SHEET #:
5
OF 6 SHEETS

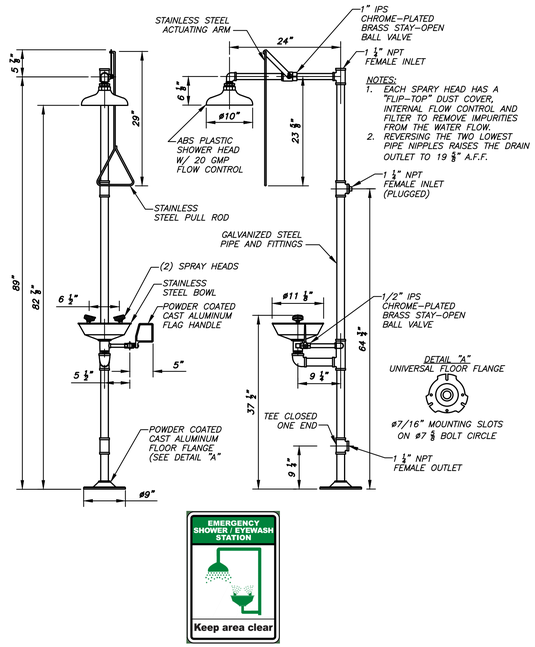

NOTES:
1. EACH SPARY HEAD HAS A "FLIP-TOP" DUST COVER, INTERNAL FLOW CONTROL AND FILTER TO REMOVE IMPURITIES FROM THE WATER FLOW.
2. REVERSING THE TWO LOWEST PIPE NIPPLES RAISES THE DRAIN OUTLET TO 19 3/8" A.F.F.

SAFETY SHOWER WITH EYE/FACE WASH DETAIL

SCALE: N.T.S.

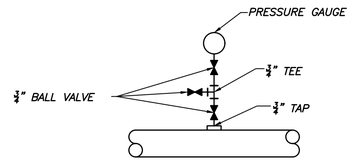

NOTE: ALL VALVES, FITTING AND PIPING TO BE BRONZED, RATED FOR 200 PSI

PRESSURE GAUGE DETAIL

SCALE: N.T.S.

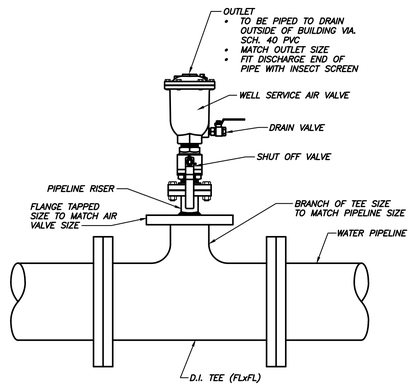

1/2"-3" WELL SERVICE AIR VALVE DETAIL

SCALE: N.T.S.

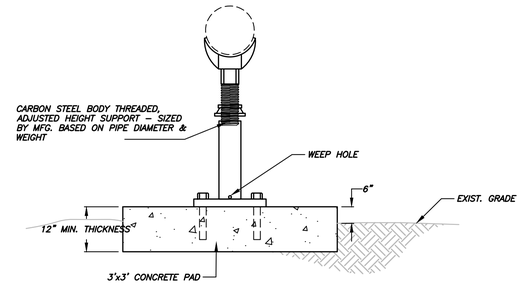

NOTES:
ALL CONNECTERS TO BE 316 STAINLESS STEEL

ADJUSTABLE PIPE SUPPORT

SCALE: N.T.S.

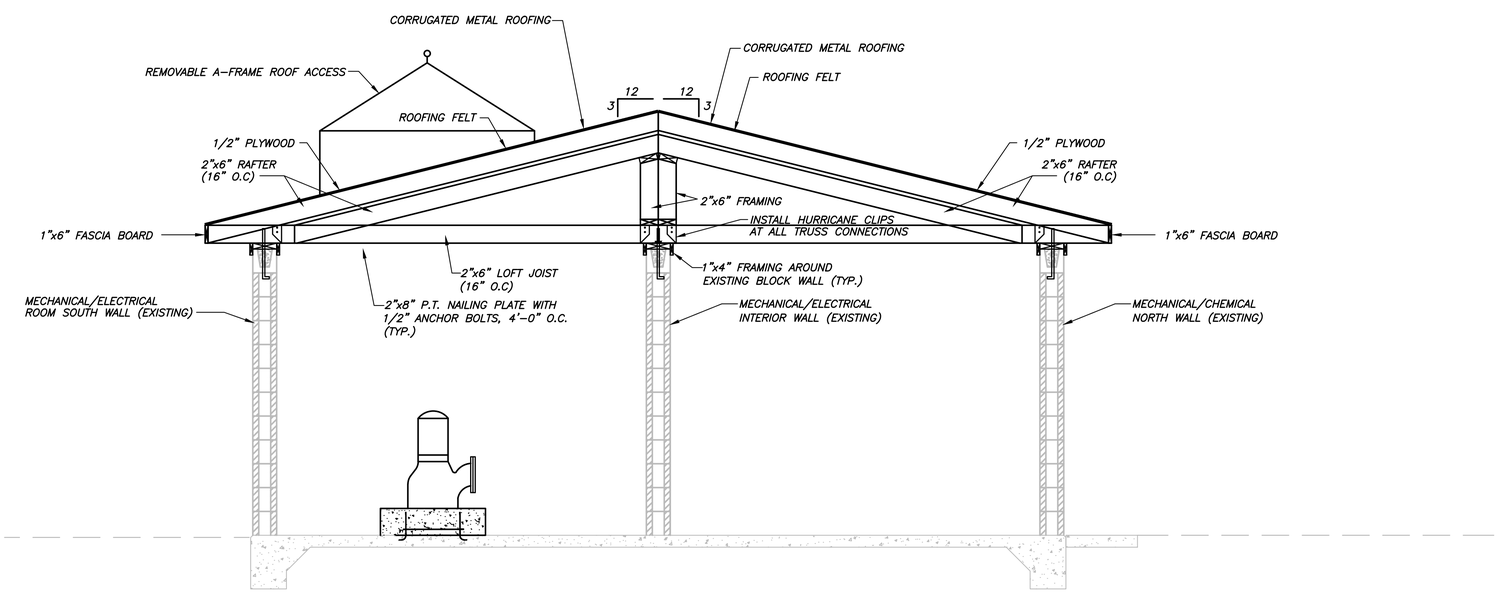

CHEMICAL FEED BUILDING ROOFING DETAIL

SCALE: N.T.S.

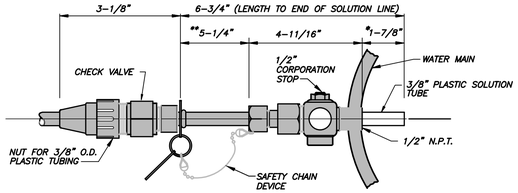

* DO NOT INSERT TUBE BEYOND CENTER OF MAIN.

** DISTANCE TUBE MUST BE WITHDRAWN TO CLOSE CORPORATION STOP.

CHEMICAL FEED INJECTION TAP

N.T.S.

GEORGIA811
www.Georgia811.com
Know what's **below.** **Call** before you dig.

OWNER/24-HOUR CONTACT INFO:

OWNER: CITY OF ALBANY
ATTN: DAVID APPERSON - WATER SYSTEM MANAGER
ADDRESS: P.O. BOX 1788
1726 LILLY POND ROAD
ALBANY, GA 31701
PHONE: (229) 883-8330
EMAIL: DAPPERSON@ALBANYGA.GOV

CONSTRUCTION DETAILS

Revision	Date

STILL WATERS ENGINEERING
130 VETERINARY WAY UNIT 2, LEESBURG, GA. 31763, 229.496.6700
WWW.STILLWATERSENG.COM

WELL NO. 35 UPGRADES
FOR THE
CITY OF ALBANY UTILITIES DIVISION
DOUGHERTY COUNTY, GEORGIA

GEORGIA REGISTERED NO.30817 PROFESSIONAL ENGINEER JAMES BRIAN HENDERSON

LEVEL II CERTIFIED DESIGN PROFESSIONAL, CERT. #13669
EXPIRES: 12/08/2027

Project No.	Date:
A1202.014	AUG 2025
Scale: AS SHOWN	Designed By: J.B.H.

SHEET #: 6 OF 6 SHEETS

SCHEMATIC DIAGRAM SYMBOLS:

	CONDUCTORS CONNECTED
	CONDUCTORS NOT CONNECTED
	CONNECTION POINT
XX	TERMINAL POINT FOR OUTGOING CONDUCTORS, WITH IDENTIFICATION. "XX" DENOTES CONTRACTOR ASSIGNED.
MCPXXX–XX XXA	MAGNETIC–ONLY CIRCUIT BREAKER (MCP), WITH CURRENT RATING
CBXXX–XX XXA	CIRCUIT BREAKER, THERMAL–MAGNETIC UNLESS OTHERWISE NOTED, WITH FRAME SIZE AND TRIP RATING
FUXXX–XX XXA	FUSE WITH SIZE AND OPTIONAL IDENTIFICATION.
DSXXX–XX XXXA	DISCONNECT SWITCH. RATING OPTIONAL. 30 AMP, 600V RATED MINIMUM UNLESS OTHERWISE NOTED.
FUXXX–XX XXA	FUSE DISCONNECT SWITCH. RATING OPTIONAL. 30 AMP, 600V RATED MINIMUM UNLESS OTHERWISE NOTED.
M–XXX XX	MOTOR (HP AS SHOWN, PHASES AS REQUIRED)
MSR–XXX XX XX	MOTOR STARTER COIL
M–XXX	MOTOR CONTACT
OL–XXX	THERMAL MOTOR OVERLOAD
XZXXX–XX	MOTOR SPACE HEATER
LSXXX–XX LSXXX–XX	LIMIT SWITCH NORMALLY CLOSED AND NORMALLY OPEN
PSXXX–XX PSXXX–XX	PRESSURE SWITCH NORMALLY CLOSED AND NORMALLY OPEN
TSXXX–XX TSXXX–XX	TEMPERATURE SWITCH NORMALLY CLOSED AND NORMALLY OPEN
FSXXX–XX FSXXX–XX	FLOW SWITCH NORMALLY CLOSED AND NORMALLY OPEN
FLTXXX–XX FLTXXX–XX	LEVEL SWITCH NORMALLY CLOSED AND NORMALLY OPEN
PRSXXX–XX PRSXXX–XX	PROXIMITY SWITCH NORMALLY CLOSED AND NORMALLY OPEN
PCSXXX–XX PCSXXX–XX	PULLCORD SWITCH NORMALLY CLOSED AND NORMALLY OPEN
SVXXX–XX	SOLENOID VALVE
PBXXX–XX PBXXX–XX	MOMENTARY PUSHBUTTON NORMALLY CLOSED AND NORMALLY OPEN
SSXXX–XX SSXXX–XX 0X 0X	SELECTOR SWITCH NORMALLY CLOSED AND NORMALLY OPEN 0X – LEFT POSITION OF HANDLE X0 – RIGHT POSITION OF HANDLE
TRXXX–XX TRXXX–XX 0–30 SEC 0–30 SEC	TIME DELAY SWITCH NORMALLY CLOSED AND NORMALLY OPEN
LTXXX–XX X	PILOT LIGHT X = LENS COLOR A = AMBER B = BLUE G = GREEN R = RED W = WHITE
CRXXX–XX	CONTROL RELAY
CRXXX–XX CRXXX–XX	CONTROL RELAY CONTACT NORMALLY CLOSED AND NORMALLY OPEN
ALXXX–XX	ALARM LIGHT
AHXXX–XX	ALARM HORN
H1 H2 TFRXXX–XX X1 X2	CONTROL POWER TRANSFORMER, PRIMARY AND SECONDARY VOLTAGE SHOWN. SIZE AS SHOWN OR SPECIFIED.
CTXXX–XX C.T.	CURRENT TRANSFORMER. PRIMARY/SECONDARY TURNS RATIO AS SHOWN.

GROUNDING SYMBOLS:

	GROUND ROD, 3/4" x 10'–0", COPPERCLAD (UNLESS OTHERWISE NOTED)
	GROUND ROD AND TEST WELL
	COMPRESSION TYPE GROUNDING BOND TO MOTOR CASING OR EQUIPMENT
	EXOTHERMIC TYPE GROUNDING BOND TO CABLE OR CONCRETE REBAR OR RISER
G G	GROUNDING CONDUCTOR (CONCEALED), #4/0 AWG BARE COPPER (UNLESS OTHERWISE NOTED)
GG GG	GROUNDING CONDUCTOR (EXPOSED), #4/0 AWG INSULATED COPPER (UNLESS OTHERWISE NOTED)

ONE LINE DIAGRAM SYMBOLS:

CB–XXX AF AT	LOW VOLTAGE POWER CIRCUIT BREAKER, DRAWOUT TYPE, FRAME SIZE (F) AND TRIP RATING (T) SHOWN
CB–XXX	LOW VOLTAGE POWER MOLDED CASE CIRCUIT BREAKER, NON–DRAWOUT TYPE, WITH CURRENT RATING
MCP–XXX	MAGNETIC–ONLY CIRCUIT BREAKER (MCP), DRAWOUT TYPE, WITH CURRENT RATING
	LIGHTNING ARRESTOR AND GROUND
DS–XXX	DISCONNECT OR ISOLATING SWITCH: CONTINUOUS RATING SHOWN
FS–XXX	FUSED SWITCH: FUSE AND SWITCH CONTINUOUS RATINGS SHOWN
TFR–XXX	POWER TRANSFORMER: PRIMARY & SECONDARY VOLTAGES, %Z, SIZE SHOWN
XS	CURRENT TRANSFORMER: RATIO SHOWN (3 INDICATES NO. OF CT'S) METER SWITCH, xS: AS – AMMETER SWITCH VS – VOLTMETER SWITCH FS – FREQUENCY SWITCH
PT	POTENTIAL TRANSFORMER PRIMARY & SECONDARY VOLTAGES & WINDINGS SHOWN. (x) UNITS
METER	METER: A – AMMETER KWH – WATT–HOUR METER F – FREQUENCY METER TT – TOTAL (ELAPSED) TIME METER VAR – VAR METER V – VOLTMETER W – WATTMETER
FVNR SIZE X	FULL VOLTAGE, NON–REVERSING MAGNETIC MOTOR STARTER. NEMA SIZE INDICATED
FVR SIZE X	FULL VOLTAGE, REVERSING MAGNETIC MOTOR STARTER. NEMA SIZE INDICATED
VFD–XXX XXHP	VARIABLE FREQUENCY DRIVE. NEMA SIZE INDICATED
RVSS–XXX XXHP	REDUCED VOLTAGE SOLID STATE DRIVE (SOFT START). NEMA SIZE INDICATED
XX M–XXX	MOTOR (HP AS SHOWN, PHASES AS REQUIRED)
	GENERATOR RECEPTACLE
N E ATS–XXX	AUTOMATIC TRANSFER SWITCH
N E MTS–XXX	MANUAL TRANSFER SWITCH
P–XXX–X	CABLE TAG: P – POWER CABLE C – CONTROL CABLE S – SHIELDED SIGNAL CABLE
Gx	GENERATOR TAG: G – EQUIPMENT TO RUN OFF GENERATOR X – STEP NUMBER FOR EQUIPMENT STARTING OFF THE GENERATOR

CIRCUIT AND RACEWAY SYMBOLS:

	RACEWAY OR WIRING SYSTEM ABOVE FLOOR LEVEL BELOW CEILING, EXPOSED. (UNLESS OTHERWISE NOTED)
	RACEWAY OR WIRING SYSTEM BELOW FLOOR LEVEL, ABOVE CEILING, HIDDEN, OR EXISTING CABLE/CONDUIT. (UNLESS OTHERWISE NOTED)
	ONE LINE DIAGRAM AND SCHEMATIC DIAGRAM FIELD WIRING. (UNLESS OTHERWISE NOTED)
	ONE LINE DIAGRAM EQUIPMENT ENCLOSURE. (UNLESS OTHERWISE NOTED)
PBD A–1,3,5	HOME RUN – SEE PANELBOARD SCHEDULE FOR CIRCUIT INFORMATION EXAMPLE: HOME TO PANELBOARD PBD A, CIRCUITS 1, 3, AND 5

GENERAL ABBREVIATIONS:

AR	ALARM RELAY	M	MOTOR CONTACTOR
AS	AMMETER SELECTOR SWITCH	mA	MILLIAMPERE
A, AMP	AMP(S), AMPERE(S)	MAX	MAXIMUM
AC	ALTERNATING CURRENT	MCB	MAIN CIRCUIT BREAKER
AFF	ABOVE FINISHED FLOOR	MCC	MOTOR CONTROL CENTER
AHAP	AS HIGH AS POSSIBLE	MCP	MOTOR CONTROL PANEL/MOTOR CIRCUIT PROTECTOR
AIC	AMPS INTERRUPTING CAPACITY, SYMM.	MECH	MECHANICAL
AL	ALUMINUM	MFR	MANUFACTURE(R)
AT	AMPERE TRIP	MH	MANHOLE
AF	AMPERE FRAME	MIC	MICROPHONE
AUTO	AUTOMATIC	MIN	MINIMUM
AUX	AUXILIARY	MISC	MISCELLANEOUS
AWG	AMERICAN WIRE GAUGE	mM	MILLIMETER
BC	BARE COPPER CONDUCTOR	mV	MILLIVOLT
BKR	BREAKER	MCM	MILLI CIRCULAR MILLS
		MOP	MOTOR OPERATOR PANEL
C	CONDUCTOR/CONTACTOR	MPR	MOTOR PROTECTION RELAY
CB	CIRCUIT BREAKER	MSH	MOISTURE SENSOR HIGH
CJB	CIRCUIT JUNCTION BOX	MTR	MOTOR
CKT	CIRCUIT	MVS	MEDIUM VOLTAGE STARTER
CLG	CEILING		
CR	CONTROL RELAY	N/A	NOT APPLICABLE
CND	CONDUIT	NC	NORMALLY CLOSED
CONC	CONCRETE	NEUT,N	NEUTRAL
CS	CONTROL SWITCH	NF	NON–FUSED
CONT	CONTROL	NIC	NOT IN CONTRACT
CPT	CONTROL POWER TRANSFORMER	NO	NORMALLY OPEN
CT	CURRENT TRANSFORMER	NOM	NOMINAL
CU	COPPER	NP	NAMEPLATE
		NTS	NOT TO SCALE
D	DIAMETER		
DB	DUCT BANK	OC	ON CENTER
DC	DIRECT CURRENT	OD	OUTSIDE DIAMETER
DET	DETAIL	OH	OVERHEAD
DIAG	DIAGRAM	OL's	OVERLOADS
DPSH	DIFFERENTIAL PRESSURE SWITCH	OT	OIL TIGHT
DS	DISCONNECT SWITCH		
DWG	DRAWING	P	POLE
		PA	PUBLIC ADDRESS
EA	EACH	PB	PUSHBUTTON, PULLBOX
EC	ELECTRICAL CONTRACTOR	PE	PHOTO ELECTRIC CELL
EF	EXHAUST FAN	PF	POWER FACTOR
EL	ELEVATION	PH	PHASE
ELEC	ELECTRIC(AL)	PJB	POWER JUNCTION BOX
EMER	EMERGENCY	PLC	PROGRAMMABLE LOGIC CONTROLLER
ENCL	ENCLOSURE/ENCLOSED	PNL	PANEL
EP	EXPLOSION PROOF EQUIP.	PP	POWER PANEL
EX	EXISTING	PR	PAIR
		PRI	PRIMARY
FCP	FURNISHED WITH EQUIPMENT PANEL	PS	PRESSURE SWITCH
FDR	FEEDER	PT	POTENTIAL TRANSFORMER
FLA	FULL LOAD AMPS (NAMEPLATE DATA)	PVC	POLYVINYL CHLORIDE
FLC	FULL LOAD CURRENT (NEC TABLE)	PWR	POWER
FPP	FIBER OPTIC DISTRIBUTION PANEL		
FS	FLOW SWITCH	QSH	SHEAR PIN LIMIT SWITCH
FU	FUSE		
FUT	FUTURE	RCPT	RECEPTACLE
FVNR	FULL VOLTAGE NON–REVERSING	RCT	REACTOR
FVR	FULL VOLTAGE REVERSING	REF	REFERENCE REQ'D REQUIRED
		RMS	ROOT MEAN SQUARE
GALV	GALVANIZED	RTD	RESISTANCE TEMPERATURE DETECTOR
GEN	GENERATOR	RVSS	REDUCED VOLTAGE SOFT STARTER
GFR	GROUND FAULT RELAY		
GRD	GROUND	SCH	SCHEDULE
GRS	GALVANIZED RIGID STEEL	SE	SPEED SENSOR
		SEC	SECONDARY
H	HIGH	SEL	SELECTOR
HGT	HEIGHT	SER	SERVICE ENTRANCE RATED
HH	HANDHOLE	SPDT	SINGLE POLE DOUBLE THROW
HID	HIGH INTENSITY DISCHARGE	SPEC	SPECIFICATION
HP	HORSEPOWER	SPHTR	MOTOR SPACE HEATER
HS	HAND STATION (SWITCH)	SPKR	SPEAKER
HVAC	HEATING, VENTILATION AND AIR CONDITIONING	SS	STAINLESS STEEL
		SSL	SPEED SWITCH
HZ	HERTZ (CYCLES PER SECOND)	SUB	SUBSTATION
HOA	HAND/OFF/AUTO SELECTOR SWITCH	SW	SWITCH
HOR	HAND/OFF/REVERSE SELECTOR SWITCH	SYMM	SYMMETRICAL
HMH	HIGH VOLTAGE MANHOLE	SYS	SYSTEM
		SV	SOLENOID OPERATED VALVE
ID	INSIDE DIAMETER	SPB	SIGNAL PULL BOX
IMC	INDIVIDUAL MOTOR CONTROLLER		
INTLK	INTERLOCK	TB	TERMINAL BOX
INST	INSTANTANEOUS	TEL	TELEPHONE
INSTR	INSTRUMENT	TEMP	TEMPERATURE
I/O	INPUT–OUTPUT	TFR	TRANSFORMER
		TH	THERMOSTAT
JB	JUNCTION BOX	TJB	TERMINAL JUNCTION BOX
		TSH	TEMPERATURE SENSOR HIGH
KV	KILOVOLT	TV	TELEVISION
KVA	KILOVOLT–AMPERE	TYP	TYPICAL
KVAR	KILOVOLT–AMPERE REACTIVE	TR	TIMING RELAY
KW	KILOWATT	TVSS	TRANSIENT VOLTAGE SURGE SUPPRESSOR
KWH	KILOWATT–HOUR	TSP	TWISTED SHIELDED PAIR
KAIC	KILO AMPERE INTERRUPTING CURRENT		
		UG	UNDERGROUND
LOR	LOCAL/OFF/REMOTE	UH	UNIT HEATER
L	LONG	UON	UNLESS OTHERWISE NOTED
LC	LIGHTING CONTACTOR		
LCP	LOCAL CONTROL PANEL	V	VOLT
LP	LIGHTING PANEL	VA	VOLT AMPERE
LOS	LOCK–OUT STOP	VAR	VOLT AMPERE REACTIVE
LSIG	LONG, SHORT, INSTANTANEOUS TRIP SETTING AND GROUND FAULT PROTECTION	VFD	VARIABLE FREQUENCY DRIVE
		VSH	VIBRATION SWITCH
LSH	LEVEL SWITCH HIGH		
LSHH	LEVEL SWITCH HIGH–HIGH ALARM	W	WATT, WIRE, WIDE
LSL	LEVEL SWITCH LOW	W/	WITH
LSLL	LEVEL SWITCH LOW–LOW ALARM	W/O	WITHOUT
LSM	LEVEL SWITCH MIDDLE	WE	WEIGHT LOAD CELL
LSO	LIMIT SWITCH OPEN	WIT	WEIGHT INDICATING TRANSMITTER
LSC	LIMIT SWITCH CLOSED	WP	WEATHERPROOF
LTG	LIGHTING		
LV	LOW VOLTAGE	XL	WARNING HORN/LIGHT
		XT	ANEMOMETER
		ZS	POSITION (LIMIT) SWITCH
		ZSO	POSITION (LIMIT) SWITCH OPEN
		ZSC	POSITION (LIMIT) SWITCH CLOSED
		ZT	POSITION TRANSMITTER

GENERAL NOTES:

1. SCOPE:
   A. FURNISH ALL LABOR, MATERIAL, EQUIPMENT AND TOOLS REQUIRED TO COMPLETE INSTALLATION OF THE ELECTRICAL SYSTEM INCLUDING BUT NOT LIMITED TO WIRING, BOXES, LIGHT FIXTURES, PANELS, SWITCHES, RECEPTACLES, DISCONNECTS, STARTERS, AND ALL OTHER WORK INDICATED ON THE DRAWINGS OR AS SPECIFIED HEREIN.
   B. OBTAIN ALL PERMITS, INSPECTIONS, AND APPROVALS AS REQUIRED BY THE LOCAL AUTHORITIES HAVING JURISDICTION AND DELIVER CERTIFICATE OF APPROVAL TO THE GENERAL CONTRACTOR. ALL ASSOCIATED FEES SHALL BE PAID BY THE CONTRACTOR.
   C. ALL MATERIALS AND EQUIPMENT OF THE ELECTRICAL SYSTEM NECESSARY FOR ITS PROPER AND SAFE OPERATION OR OTHERWISE REQUIRED BY CODE, BUT NOT SPECIFICALLY MENTIONED OR SHOWN ON THE DRAWINGS, SHALL BE FURNISHED AND INSTALLED WITHOUT ADDITIONAL CHARGE.
   D. WORK SHALL BE INSTALLED IN ACCORDANCE WITH THE LATEST EDITION OF NATIONAL ELECTRICAL CODE, THE LATEST STANDARD BUILDING CODE, ANY OTHER LOCALLY ADOPTED CODES AND LOCAL AUTHORITIES HAVING JURISDICTION.
2. ALL SUBSTITUTIONS FOR EQUIPMENT AND MATERIAL SHALL BE SUBMITTED TO THE ENGINEER FOR REVIEW PRIOR TO PURCHASING.
3. THE CONTRACTOR SHALL COORDINATE ALL WORK WITH ALL OTHER TRADES. IT IS THE RESPONSIBILITY OF CONTRACTOR TO VERIFY THE ACTUAL LOCATION OF EQUIPMENT, DUCTWORK, PIPING, ETC. AND COORDINATED THE INSTALLATION ACCORDINGLY. THE EQUIPMENT WIRING SHALL INCLUDE ALL NECESSARY CABLES AND CONDUIT REQUIRED FOR THE PROPER AND SAFE EQUIPMENT OPERATION.
4. THE CONTRACTOR SHALL CONFIRM ALL DIMENSIONS AND DISTANCES IN THE FIELD. IN CASE OF DISCREPANCY, CONTRACTOR SHALL INCLUDE A MORE EXPENSIVE OPTION.
5. ALL MATERIALS SELECTION SHALL BE AS PER THE SCHEDULE SHOWN ON DWG. E–2, UNLESS NOTED OTHERWISE ON THE DRAWINGS.
6. ALL ITEMS DESIGNED TO BE REMOVED SHALL BECOME THE PROPERTY OF CONTRACTOR, WITH THE EXCEPTION OF THE ITEMS IDENTIFIED BY THE OWNER DURING THE CONSTRUCTION.

PLAN DRAWING SYMBOLS:

M	MOTOR CONNECTION
	MOTOR STARTER, INDIVIDUAL –– NOT LOCATED IN AN MCC OR SIMILAR GROUP ASSEMBLY
J	COMBINATION MOTOR STARTER/DISCONNECT INDIVIDUAL –– NOT LOCATED IN AN MCC OR SIMILAR GROUP ASSEMBLY
J	DISCONNECT SWITCH. DISCONNECT SWITCHES ARE HEAVY DUTY, SINGLE THROW, WITH NEMA 4X ENCLOSURE UNLESS OTHERWISE NOTED. MOUNT AT 4'–8" TO CENTER OF DISCONNECT.
J	FUSED DISCONNECT, NON–FUSED. PROVISION FOR CLASS R FUSES.
	FIELD INSTRUMENT CONNECTION
	START/STOP HAND STATION MOUNTED TO HANDRAIL (NEMA 4X UNLESS OTHERWISE NOTED)
$X	120V, 20A, 1P TOGGLE SWITCH [BLANK] = 1P TOGGLE SWITCH 2 = 2P TOGGLE SWITCH 3 = 3P TOGGLE SWITCH D = SLIDE DIMMER M = MOTOR RATED S = TOGGLE WITH OCCUPANCY SENSOR
	DUPLEX 120V RECEPTACLE, 120V, 20A, 1P. MOUNT 6" ABOVE COUNTER, DESK, OR CABINET.
	GFCI DUPLEX 120V RECEPTACLE, 120V, 20A, 1P. MOUNT 6" ABOVE COUNTER, DESK, OR CABINET.
	QUADRAPLEX 120V RECEPTACLE, 120V, 20A, 1P. MOUNT 6" ABOVE COUNTER, DESK, OR CABINET.
	TELEPHONE BOX. MOUNT 18" A.F.F., INSTALL A 1/2" CONDUIT FROM BOX TO 6" ABOVE CEILING. PROVIDE PULL CORD FOR FUTURE CONNECTIONS AS REQUIRED.
	ETHERNET CAT–6 BOX. MOUNT 18" A.F.F., INSTALL A 1/2" CONDUIT FROM BOX TO 6" ABOVE CEILING. PROVIDE PULL CORD FOR FUTURE CONNECTIONS AS REQUIRED.
	60A, 480V, 3PH WELDING RECEPTACLE WITH INTERLOCKED 60A (NEMA 4X FUSED DISCONNECT SWITCH UNLESS OTHERWISE NOTED)
JB	JUNCTION BOX
	RECESSED FLOOR JUNCTION BOX

ELECTRICAL LEGEND & NOTES

EDEC
A SALAS O'BRIEN COMPANY
EDEC, INC.
4120 CHATTAHOOCHEE TRACE
SUITE A
DULUTH, GEORGIA 30097
TEL. (770) 493-8685

Revision	Date
A	08/13/25

STILL WATERS ENGINEERING
130 VETERINARY WAY, UNIT 2, LEESBURG, GA. 31763, 229.496.5700
WWW.STILLWATERSENG.COM

WELL No. 35 UPGRADES
FOR THE
CITY OF ALBANY UTILITIES DIVISION
DOUGHERTY COUNTY, GEORGIA

GEORGIA REGISTERED PROFESSIONAL ENGINEER No. 30737 DENIS VYSTROPOV

Project No.	Date:
A1202.014	AUG 2025
Scale: N.T.S.	Designed By: DV

SHEET #: E-1
OF 9 SHEETS

ELECTRICAL EQUIPMENT MATERIALS RATING						
		INSTALLATION AREA AND DESIGN CRITERIA				
NO.	EQUIPMENT	INDOOR PROCESS (PIPING GALLERY, PUMPS ROOM, ETC.) ENVIRONMENT: CORROSIVE; DAMP	INDOOR CHEMICAL ROOM ENVIRONMENT: CORROSIVE; DAMP	OUTDOOR GENERAL AREAS ENVIRONMENT: CORROSIVE; WET	BELOW GRADE VAULTS (METERING VAULT, VALVE VAULT, ETC.) ENVIRONMENT: CORROSIVE; WET	UNDERGROUND AND DIRECT BURIED ENVIRONMENT: CORROSIVE; WET
1	RIGID CONDUITS	RMC – ALUMINUM	RC – PVC SCH. 80 WITH PLASTIC STRAPS	RMC – ALUMINUM	RMC – ALUMINUM	DIRECT BURIED – PVC 40; CONCRETE ENCASED – PVC 40.
2	FLEXIBLE CONDUITS	LIQUIDTIGHT FLEXIBLE METALLIC CONDUIT (LFMC)	LIQUIDTIGHT FLEXIBLE NONMETALLIC CONDUIT (LFNC)	LIQUIDTIGHT FLEXIBLE METALLIC CONDUIT (LFMC)	LIQUIDTIGHT FLEXIBLE METALLIC CONDUIT (LFMC)	N/A
3	CABLE TRAYS	LADDER TYPE – ALUMINUM	FIBERGLASS REINFORCED PLASTIC	LADDER TYPE – ALUMINUM	LADDER TYPE – ALUMINUM	N/A
4	JUNCTION BOXES	STEEL – NEMA 12	NEMA 4X, PLASTIC	STEEL – NEMA 3R	STEEL – NEMA 4	POLYMER CONCRETE
5	PULL BOXES	STEEL – NEMA 12	NEMA 4X, PLASTIC	STEEL – NEMA 3R	STEEL – NEMA 4	POLYMER CONCRETE
6	EQUIPMENT RACKS/SUPPORTS/HARDWARE	ALUMINUM	STAINLESS STEEL 316	ALUMINUM	ALUMINUM	STAINLESS STEEL 304
7	FASTENERS	ALUMINUM	STAINLESS STEEL 316	ALUMINUM	ALUMINUM	STAINLESS STEEL 304
8	SWITCHGEAR	NEMA 1	N/A	NEMA 3R	N/A	N/A
9	SWITCHBOARD	NEMA 1	N/A	NEMA 3R	N/A	N/A
10	MOTOR CONTROL CENTER	NEMA 1	N/A	NEMA 3R	N/A	N/A
11	PANELBOARDS	NEMA 12	NEMA 4X, TYPE 316 SS	NEMA 3R	N/A	N/A
12	DRY TYPE TRANSFORMERS	NEMA 3R	NEMA 4X, TYPE 316 SS	NEMA 3R	N/A	N/A
13	DISCONNECT SWITCHES	NEMA 12	NEMA 4X, TYPE 316 SS	NEMA 3R	NEMA 4	N/A
14	MOTOR STARTERS	NEMA 12	NEMA 4X, TYPE 316 SS	NEMA 3R	NEMA 4	N/A
15	CONTACTORS	NEMA 12	NEMA 4X, TYPE 316 SS	NEMA 3R	NEMA 4	N/A
16	CONTROL PANELS	NEMA 12	NEMA 4X, TYPE 316 SS	NEMA 3R	N/A	N/A
17	MOTOR HOUSING MINIMUM PROTECTION RATING	TEFC	TEFC	TEFC	TEFC	N/A
18	INSTRUMENTATION MINIMUM PROTECTION RATING	NEMA 4	NEMA 4X	NEMA 4	NEMA 4	NEMA 6P
19	VALVE ACTUATORS	NEMA 4	NEMA 4	NEMA 4	NEMA 6P	N/A
20	WIRING DEVICE BOXES	DIE–CAST ALUMINUM; WEATHERPROOF	PLASTIC; WEATHERPROOF	DIE–CAST ALUMINUM; WEATHERPROOF	DIE–CAST ALUMINUM; WEATHERPROOF	N/A
21	DEVICES COVER PLATES	DIE–CAST ALUMINUM; WEATHERPROOF	PLASTIC; WEATHERPROOF (WITH GASKET)	DIE–CAST ALUMINUM; WEATHERPROOF	DIE–CAST ALUMINUM; WEATHERPROOF	N/A
22	OUTLET BOX HOODS	ALUMINUM; WEATHERPROOF (WHILE–IN–USE COVER)	PLASTIC; WEATHERPROOF (WHILE–IN–USE COVER) (WITH GASKET)	ALUMINUM; WEATHERPROOF (WHILE–IN–USE COVER)	ALUMINUM; WEATHERPROOF (WHILE–IN–USE COVER)	N/A

CABLE TYPES REQUIREMENTS						
	MATERIAL	SERVICE ENTRANCE	VFD MOTOR FEEDERS	POWER	CONTROL	SIGNAL
CABLE TYPES	COPPER, UNLESS NOTED OTHERWISE	XHHW, 600V	SHIELDED VFD CABLES, 1000V	THWN–2, 600V	THWN–2, 600V	SHIELDED TWISTED TYPE, 600V

NOTES:

1. POWER CABLES REQUIREMENTS:
   - 1.1. MINIMUM ALLOWED WIRE GAUGE: #12 AWG.
   - 1.2. MAXIMUM ALLOWED WIRE GAUGE: 600KCMIL.
   - 1.3. MAXIMUM MULTICONDUCTOR CABLES SIZE: #1 AWG.
   - 1.4. MAXIMUM SOLID CORE CABLES SIZE: #10 AWG.
2. CONTROL CABLES REQUIREMENTS:
   - 2.1. CABLES CONSTRUCTION TYPE: SINGLE CONDUCTOR.
   - 2.2. MINIMUM ALLOWED WIRE GAUGE: #14 AWG.
3. SIGNAL CABLES REQUIREMENTS:
   - 3.1. CABLES CONSTRUCTION TYPE: MULTICONDUCTOR CONDUCTOR WITH OVERALL SHIELD AND DRAIN WIRE.
   - 3.2. MINIMUM ALLOWED WIRE GAUGE: #16 AWG.
   - 3.3. MAXIMUM NUMBER OF PAIRS/TRIADS IN MULTI–PAIR/TRID CABLE: 2.

INSTALLATION REQUIREMENTS:

GENERAL:

1. ALL ELECTRICAL EQUIPMENT AND MATERIALS SHALL BE UL LISTED.
2. ALL ELECTRICAL EQUIPMENT AND MATERIALS INSTALLED OUTDOORS SHALL BE UV RESISTANT.
3. ALL ELECTRICAL EQUIPMENT AND MATERIALS OF THE SAME TYPE SHALL BE OF THE SAME MANUFACTURER AND MODEL LINE.
4. ALL FREESTANDING EQUIPMENT SHALL BE INSTALLED ON 4" HOUSEKEEPING PAD, ELEVATED ABOVE THE SURROUNDING SURFACE.
5. ALL ELECTRICAL, INSTRUMENTATION AND CONTROL SYSTEM COMPONENTS LOCATIONS SHALL BE ADJUSTED TO PROVIDE NEC REQUIRED WORKING CLEARANCES.
6. ALL ELECTRICAL EQUIPMENT INSTALLED OUTDOORS SHALL HAVE CONCRETE PADS EXTENDING 3FT IN FRONT OF THE EQUIPMENT.
7. CONTRACTOR SHALL ADJUST CIRCUIT BREAKER SIZES, CABLES AND CONDUITS FOR ELECTRICAL EQUIPMENT AT NO ADDITIONAL COST BASED ON THE ACTUAL ACCEPTED SHOP DRAWINGS.
8. CONTRACTOR SHALL CONFIRM ELECTRICAL EQUIPMENT DIMENSIONS PRIOR TO RELEASING FOR FABRICATION LOCATED IN THE AREAS WITH LIMITED AVAILABLE SPACE TO ENSURE PROPER EQUIPMENT INSTALLATION PROVIDING NEC REQUIRED WORKING CLEARANCES.
9. FOR NEW CONSTRUCTION, INSTALLATION AND/OR DEMOLITION THAT INTERRUPTS ANY POWER, CONTROL OR SIGNAL WIRING TO EXISTING EQUIPMENT OR DEVICES THAT SHALL REMAIN IN OPERATION. CONTRACTOR SHALL INCLUDE ALL REQUIRED BREAKERS, CABLES/CONDUITS AND/OR ANY OTHER EQUIPMENT AS REQUIRED TO KEEP THE EXISTING SYSTEM FUNCTIONAL.
10. ALL MOTORS USED WITH VARIABLE FREQUENCY DRIVES SHALL BE INVERTER DUTY RATED TYPE.
11. ALL OUTDOOR ENCLOSURES CABLES ENTRY POINTS SHALL BE IN THE BOTTOM OF THE ENCLOSURE. IN CASE OF INABILITY TO MAKE BOTTOM PENETRATION, SIDE CONNECTION WOULD BE ACCEPTABLE. ENCLOSURES TOP ENTRY ARE NOT ALLOWED.

POWER DISTRIBUTION AND CONDUITS INSTALLATION REQUIREMENTS:

1. ALL POWER DISTRIBUTION EQUIPMENT SHALL BE BY THE FOLLOWING MANUFACTURES: EATON, SCHNEIDER ELECTRIC, ABB, ALLEN–BRADLEY, SIEMENS OR APPROVED EQUAL.
2. ALL MOTOR STARTERS, VFD'S, RVSS'S SHALL BE BY THE FOLLOWING MANUFACTURES: EATON, SCHNEIDER ELECTRIC, ABB, ALLEN–BRADLEY, SIEMENS OR APPROVED EQUAL.
3. ALL CONDUITS ENDS SHALL BE FREE OF METAL SHAVINGS AND BE PROVIDED WITH FITTINGS WITH INSULATED BUSHING.
4. ALL EXPOSED CONDUITS SHALL BE MINIMUM OF 3/4". ALL BURIED CONDUIT SHALL BE MINIMUM OF 1".
5. ALL UNDERGROUND CONDUITS SHALL HAVE RIGID STEEL ELBOWS.
6. ALL METAL CONDUITS SHALL BE PROTECTED WITH A BITUMINOUS COATING WHEN INSTALLED UNDERGROUND OR WHEN IN CONTACT WITH CONCRETE.
7. CONTRACTOR IS RESPONSIBLE FOR COORDINATING ALL CABLES AND EQUIPMENT LUG SIZES. IN CASE THE CABLE IS OF A LARGER SIZE THAN THE EQUIPMENT LUG, CONTRACTOR SHALL PROVIDE THE REQUIRED CONNECTOR AT NO ADDITIONAL CHARGE TO OWNER.
8. CONTRACTOR SHALL PROVIDE PULL STRING AND PERMANENTLY ATTACHED IDENTIFICATION LABELS AT EACH CONDUIT END FOR ALL SPARE CONDUITS. EACH TAG SHALL INCLUDE CONDUIT NUMBER, SIZE AND DESTINATION POINT.
9. CONTRACTOR SHALL PROVIDE ALL REQUIRED PULL BOXES AND/OR CONDULETS TO MEET NEC ARTICLE 314 FOR CABLE PULLS.
10. ALL CABLES INSTALLED IN CABLE TRAYS SHALL BE TC RATED.
11. CONDUIT FITTING CONNECTION TYPES SHALL BE AS FOLLOWS:
    - 11.1. FOR RMC AND IMC CONDUITS – THREADED TYPE;
    - 11.2. FOR EMT CONDUITS – COMPRESSION TYPE.
12. RIGID CONDUIT CONNECTIONS TO ENCLOSURES SHALL BE MADE WITH MYERS HUBS.
13. ALL OPEN CONDUIT ENDS SHALL BE PROTECTED FROM ELEMENTS PENETRATION TO THE INSIDE THE CONDUIT WITH DUCT SEAL.
14. TO EQUIPMENT ENCLOSURES THAT ARE NOT SUITABLE FOR RIGID OR FLEXIBLE CONDUIT CONNECTION, THE CONTRACTOR SHALL PROVIDE A CORD GRIP AT THE CONDUIT END TO PROTECT THE FROM ELEMENTS PENETRATION TO THE INSIDE THE CONDUIT.
15. THE CONTRACTOR SHALL INSTALL EXPANSION COUPLINGS AS REQUIRED TO PREVENT CONDUIT DAMAGE DUE TO LONGITUDAL MOVEMENT AND/OR THERMAL EXPANSION.
16. THE CONTRACTOR SHALL INSTALL DEFLECTION COUPLINGS FOR CONDUITS RUNS THAT ARE SUBJECT TO ANGULAR AND PARALLEL MISALIGNMENT.
17. THE CONTRACTOR SHALL INSTALL DRAIN FITTING IN VERTICAL CONDUIT RUNS AT LOW POINTS IN CONDUIT SYSTEM TO PREVENT ACCUMULATION OF CONDENSATE ABOVE SEAL–OFF FITTINGS.
18. THE CONTRACTOR SHALL INSTALL DRAIN FITTINGS AT LOW POINTS OF CONDUIT RUN TO DRAIN ACCUMULATED CONDENSATE AND TO PROVIDE VENTILATION TO MINIMIZE CONDENSATION.
19. FOR OVERHEAD SERVICES THE CONTRACTOR SHALL INSTALL WEATHERED FITTINGS AS REQUIRED, FOR SERVICE CABLE INSTALLATION THROUGH THE ROOF, USE SERVICE ENTRANCE MAST KITS.
20. THE CONTRACTOR SHALL INSTALL GROUNDING BUSHING AS REQUIRED BY NEC, AS WELL AS FOR THE FOLLOWING CONDITIONS:
    - 20.1. FOR METALLIC RACEWAYS CONTAINING SERVICE CONDUCTORS
    - 20.2. FOR METALLIC RACEWAYS TERMINATED AT NON–METALLIC ENCLOSURES
    - 20.3. FOR METALLIC RACEWAYS TERMINATED ON RING KNOKOUTS REMAINING AND THE CIRCUIT EXCEEDING 250V TO GROUND NOMINAL
    - 20.4. FOR METALLIC RACEWAYS NOT TERMINATED AT ENCLOSURE

INSTRUMENTATION AND CONTROLS:

1. ALL FIELD MOUNTED INDICATING TRANSMITTERS SHALL BE PROVIDED WITH SUN/RAIN HOOD.
2. ALL CONTROL CABINETS INSTALLED OUTDOORS SHALL BE PROVIDED WITH SUN PROTECTING COVER OVER DISPLAYS TO AVOID DETERIORATION FROM UV EXPOSURE.

GROUNDING:

1. MAXIMUM DISTANCE BETWEEN DRIVEN GROUND RODS IS NOT TO EXCEED 50' UNLESS OTHERWISE NOTED.
2. ALL GROUNDING CONDUCTORS TO BE BARE, STRANDED, SOFT DRAWN, COPPER, SIZED AS INDICATED ON THE DESIGN DRAWINGS.
3. MAIN RING GROUND WIRE TO BE MAXIMUM 3' OUTSIDE FOUNDATIONS AND 2'–6" BELOW FINISH GRADE.
4. CONTRACTOR TO DETERMINE ACTUAL LOCATION OF ANY EQUIPMENT UTILIZING BONDS TO GROUNDING TAILS. CONTRACTOR TO LOCATE 1" PVC GROUNDING STUB–UPS IN ACCORDANCE WITH EQUIPMENT VENDOR INFORMATION OR DRAWING REQUIREMENTS.
5. FOR COMPRESSION APPLICATIONS, APPLY A COAT OF "NO–OXIDE" COMPOUND ONTO COPPER CABLE AND COMPRESSION CONNECTORS PRIOR TO CRIMPING CONNECTION OR USE PRE–FILLED CONNECTORS.
6. ALL GROUND CABLES STUBBING UP THROUGH CONCRETE SHALL STUB UP THRU PVC CONDUIT, SIZED PER PLAN DRAWINGS. PVC CONDUIT SHALL EXTEND A MINIMUM OF 6" ABOVE AND 6" BELOW THE CONCRETE.
7. PIGTAILS SHOULD BE INSTALLED THRU 1" PVC CONDUIT, 10' LONG U.N.O.
8. EXOTHERMIC WELDS SHALL BE UTILIZED IN UNDERGROUND INSTALLATIONS ONLY. ALL SUCH WELDS SHALL BE INSPECTED BY THE SITE ENGINEER REPRESENTATIVE PRIOR TO COVER.
9. ALL ABOVE GROUND GROUNDING CONNECTIONS SHALL EMPLOY PROPERLY RATED COMPRESSION CONNECTORS.
10. THE MAIN GROUNDING RING CONDUCTOR SHALL BE RUN AS MECHANICALLY CONTINUOUS AS POSSIBLE WITH A MINIMUM OF CUTS AND SPLICES.

ELECTRICAL MATERIALS SCHEDULE

EDEC
A SALAS O'BRIEN COMPANY
EDEC, INC.
4120 CHATTAHOOCHEE TRACE
SUITE A
DULUTH, GEORGIA 30097
TEL. (770) 493-8685

Revision	Date
A	08/13/25

STILL WATERS
ENGINEERING
130 VETERINARY WAY, UNIT 2, LEESBURG, GA. 31763, 229.496.5700
WWW.STILLWATERSENG.COM

WELL No. 35 UPGRADES
FOR THE
CITY OF ALBANY UTILITIES DIVISION
DOUGHERTY COUNTY, GEORGIA

GEORGIA REGISTERED No. 50137 PROFESSIONAL ENGINEER DENIS VYSTROPOV

Project No. A1202.014	Date: AUG 2025
Scale: N.T.S.	Designed By: DV

SHEET #:
E-2
OF 9 SHEETS

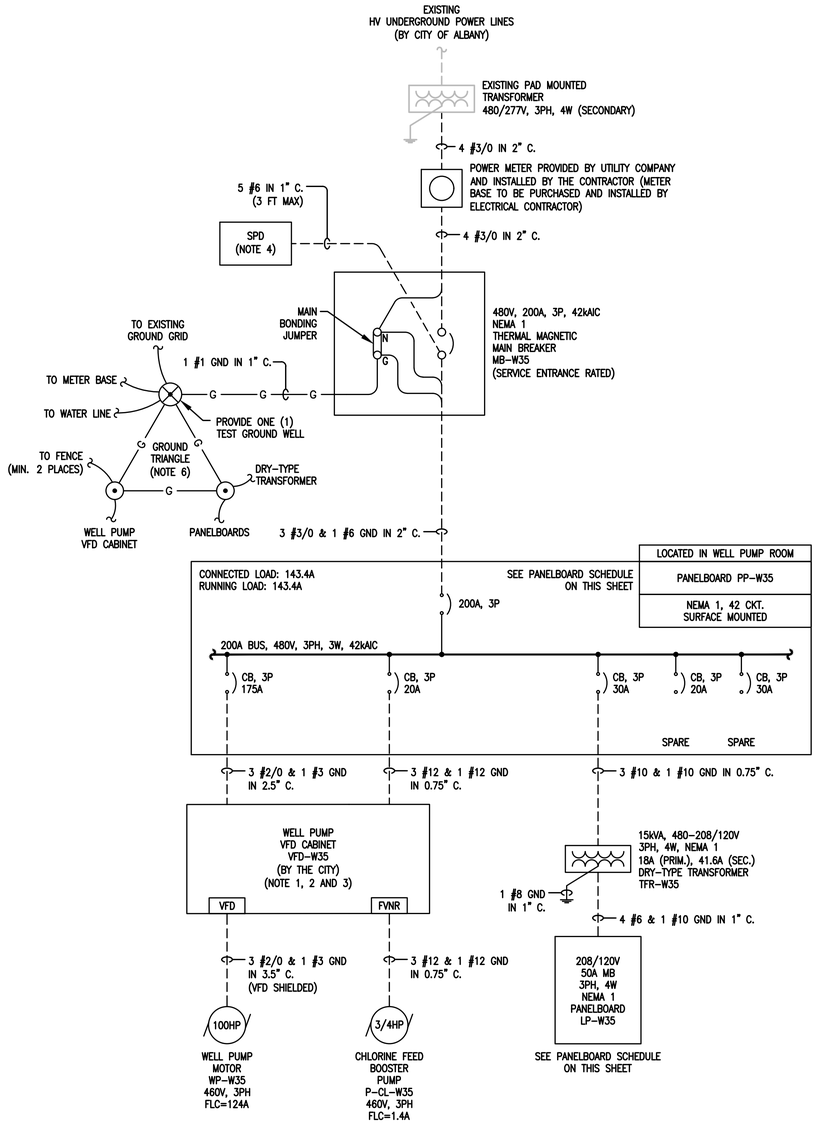

1 WELL #35 – ONE LINE DIAGRAM

PANELBOARD PP-W35 (LOCATED IN WELL PUMP ROOM)

VOLTAGE (L-N):	---	ENCLOSURE TYPE:	NEMA 1
VOLTAGE (L-L):	480V	MOUNTING:	SURFACE
PHASE, WIRES:	3 ϕ, 3 W	AIC RATING (A):	42,000 AIC
MINIMUM BUS CAPACITY (A):	200A	NOTES:	
MAIN O.C. DEVICE (A):	200A, 3P MAIN BREAKER		

CKT NO	DESCRIPTION	TRIP AMPS	POLE	PHASE LOADS (AMP) A		B		C		POLE	TRIP AMPS	DESCRIPTION	CKT NO
1	WELL PUMP VFD CABINET (VFD-W35)	175	3	124.0	1.4					3	20	WELL PUMP VFD CABINET (VFD-W35)	2
3	(WELL PUMP)					124.0	1.4					(CHLORINE PUMP)	4
5								124.0	1.4				6
7	TRANSFORMER (TFR-W35)	30	3	18.0	0.0					3	20	SPARE	8
9						18.0	0.0						10
11								18.0	0.0				12
13	SPARE	30	3	0.0	0.0							SPACE	14
15						0.0	0.0					SPACE	16
17								0.0	0.0			SPACE	18
19	SPACE			0.0	0.0							SPACE	20
21	SPACE					0.0	0.0					SPACE	22
23	SPACE							0.0	0.0			SPACE	24
25	SPACE			0.0	0.0							SPACE	26
27	SPACE					0.0	0.0					SPACE	28
29	SPACE							0.0	0.0			SPACE	30
31	SPACE			0.0	0.0							SPACE	32
33	SPACE					0.0	0.0					SPACE	34
35	SPACE							0.0	0.0			SPACE	36
37	SPACE			0.0	0.0							SPACE	38
39	SPACE					0.0	0.0					SPACE	40
41	SPACE							0.0	0.0			SPACE	42
USE THE FOLLOWING CONDUCTORS FOR PANELBOARD CIRCUITS: 20A – #12AWG; 30A – #10AWG; 175A – #2/0 AWG				CONNECTED LOAD PHASE TOTALS (AMP)									
				143.4		143.4		143.4					

2 PP-W35 – PANELBOARD SCHEDULE

PANELBOARD LP-W35 (LOCATED IN WELL PUMP ROOM)

VOLTAGE (L-N):	120V	ENCLOSURE TYPE:	NEMA 1
VOLTAGE (L-L):	208V	MOUNTING:	SURFACE
PHASE, WIRES:	3 ϕ, 4 W	AIC RATING (A):	10,000 AIC
MINIMUM BUS CAPACITY (A):	100A	NOTES:	
MAIN O.C. DEVICE (A):	50A, 3P MAIN BREAKER		

CKT NO	DESCRIPTION	TRIP AMPS	POLE	PHASE LOADS (AMP) A		B		C		POLE	TRIP AMPS	DESCRIPTION	CKT NO
1	WELL PUMP ROOM EXHAUST FAN (EF-W35-3)	20	1	2.8	2.8					1	20	CHLORINE ROOM EXHAUST FAN (EF-W35-2)	2
3	FLUORIDE ROOM EXHAUST FAN (EF-W35-1)	20	1			2.8	5.0			1	20	FLUORIDE METERING PUMP	4
5	CHLORINE GAS DETECTOR (AIT-CL-W35)	20	1					0.5	0.5	1	20	FLOW INDICATING TRANSMITTER (FIT-W35)	6
7	PLC CABINET (PLC-W35)	20	1	1.0	1.0					1	20	HIGH/LOW CHLORINE VACUUM ALARM SWITCH	8
9	CHLORINE ROOM RECEPTACLES	20	1			3.0	3.0			1	20	FLUORIDE ROOM RECEPTACLES	10
11	WELL PUMP ROOM LIGHTING	20	1					2.1	0.7	1	20	CHLORINE ROOM LIGHTING	12
13	FLUORIDE ROOM LIGHTING	20	1	0.7	1.0					1	20	SAFETY SHOWER ALARM PANEL	14
15	SAFETY SHOWER HEAT TRACE	20(*)	1			3.0	6.0			1	20	WELL PUMP ROOM RECEPTACLES	16
17	EXTERIOR LIGHTING	20	1					1.2	2.0	1	20	WELL PUMP VFD CABINET VFD-W35 (CONTROL POWER)	18
19	SPARE	20	2	0.0	1.0					1	20	CHLORINE CYLINDERS SCALE TRANSMITTER (WIT-CL-W35)	20
21						7.2	1.0			1	20	FLUORIDE TANK SCALE TRANSMITTER (WIT-FL-W35)	22
23	UNIT HEATER (UH-W35-1)	20	2					7.2	1.0	1	20	EXISTING SECURITY LIGHT	24
25				7.2	0.0					1	20	SPARE	26
27	SPACE					0.0	0.0					SPACE	28
29	SPACE							0.0	0.0			SPACE	30
31	SPACE			0.0	0.0							SPACE	32
33	SPACE					0.0	0.0					SPACE	34
35	SPACE							0.0	0.0			SPACE	36
37	SPACE			0.0	0.0							SPACE	38
39	SPACE					0.0	0.0					SPACE	40
41	SPACE							0.0	0.0			SPACE	42
USE THE FOLLOWING CONDUCTORS FOR PANELBOARD CIRCUITS: 20A – #12AWG;				CONNECTED LOAD PHASE TOTALS (AMP)						(*) – 30mA, EGFP CIRCUIT BREAKER			
				17.5		31.0		15.2					

3 LP-W35 – PANELBOARD SCHEDULE

NOTES:

1. WELL PUMP VFD CABINET SHALL BE SUPPLIED BY THE CITY AND INSTALLED BY CONTRACTOR.
2. THE CONTRACTOR SHALL PROVIDE AND INSTALL A WARNING LABEL ON THE VFD CABINET READING: "DISCONNECT ALL POWER BEFORE SERVICING. MULTIPLE POWER SOURCES MAY BE PRESENT".
3. THE CONTRACTOR SHALL REMOVE AND INSTALL VFD, MANUFACTURED BY SIEMENS, SINAMICS G120X SERIES, RATED FOR 100HP, 480V, 3PH MOTOR COORDINATE THE EXACT VFD MODEL NUMBER.
4. THE CONTRACTOR SHALL PROVIDE SURGE PROTECTION DEVICE (SPD) IN NEMA 1 ENCLOSURE. SPD SHALL BE EATON CAT#: SPD-160-480Y-3-M WITH INTEGRAL DISCONNECT SWITCH OR APPROVED EQUAL.
5. THE CONTRACTOR SHALL PERFORM ALL THE REQUIRED DEMOLITION WORK PRIOR TO THE NEW EQUIPMENT INSTALLATION. SEE DWG. E-4 FOR MORE DETAILS. CONTRACTOR SHALL COORDINATE ALL THE REQUIRED POWER OUTAGES WITH THE CITY.
6. THE CONTRACTOR SHALL PROVIDE AND INSTALL A COMPLETE GROUND GRID AND MAKE CONNECTIONS AS SHOWN ON ELECTRICAL PLANS. GRID SHALL CONSIST OF #1 AWG BARE COPPER GROUND CONDUCTOR, 3/4" DIAMETER x 10'-0" GROUND RODS AND CADWELD CONNECTIONS TO GROUND RODS.

ONE LINE DIAGRAM

EDEC
A SALAS O'BRIEN COMPANY
EDEC, INC.
4120 CHATTAHOOCHEE TRACE
SUITE A
DULUTH, GEORGIA 30097
TEL. (770) 493-8685

Revision	Date
A	08/13/25

STILL WATERS
ENGINEERING
130 VETERINARY WAY, UNIT 2, LEESBURG, GA. 31763, 229.496.5700

WELL No. 35 UPGRADES
FOR THE
CITY OF ALBANY UTILITIES DIVISION
DOUGHERTY COUNTY, GEORGIA

GEORGIA REGISTERED No. 50137 PROFESSIONAL ENGINEER DENIS VYSTROPOV

Project No. A1202.014	Date: AUG 2025
Scale: N.T.S.	Designed By: DV

SHEET #: E-3
OF 9 SHEETS

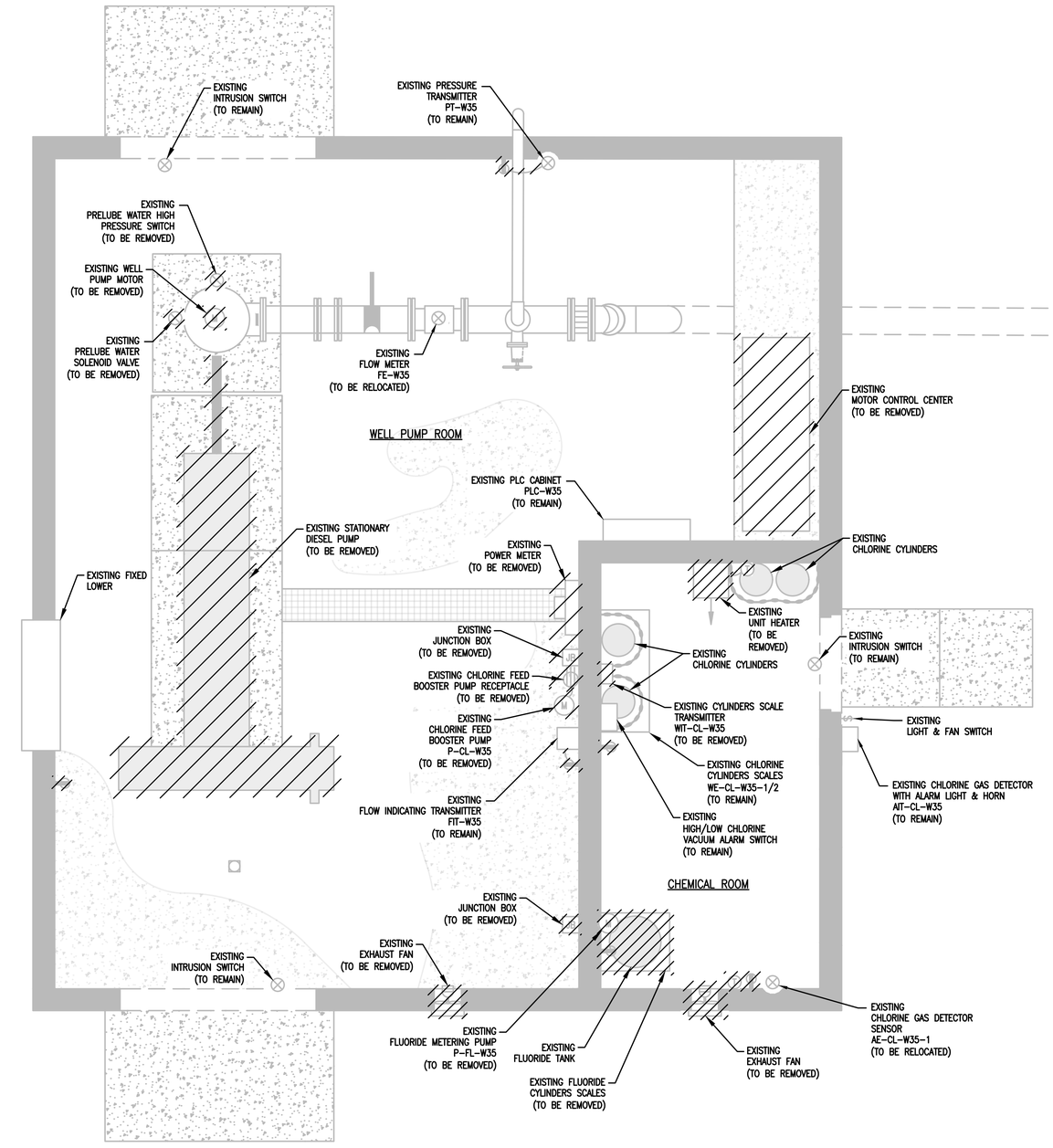

1 WELL PUMP BUILDING #35 (DEMOLITION SCOPE)
SCALE: 1/2" = 1'-0"

GRAPHIC SCALE
(IN FEET)
1/2 inch = 1 ft.

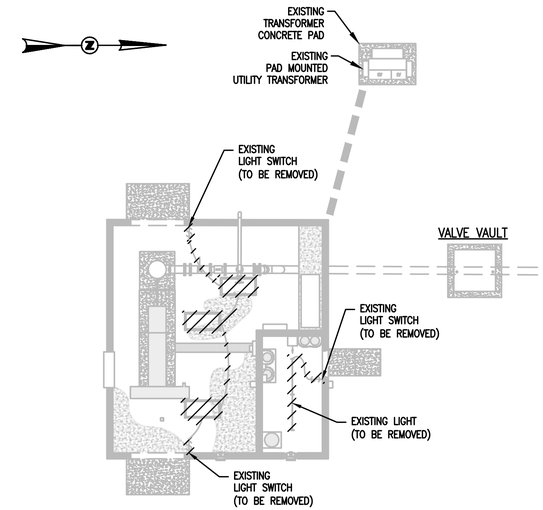

2 WELL PUMP BUILDING OVERALL LIGHTING & POWER PLAN
SCALE: 1/8" = 1'-0"

GRAPHIC SCALE
(IN FEET)
1/8 inch = 1 ft.

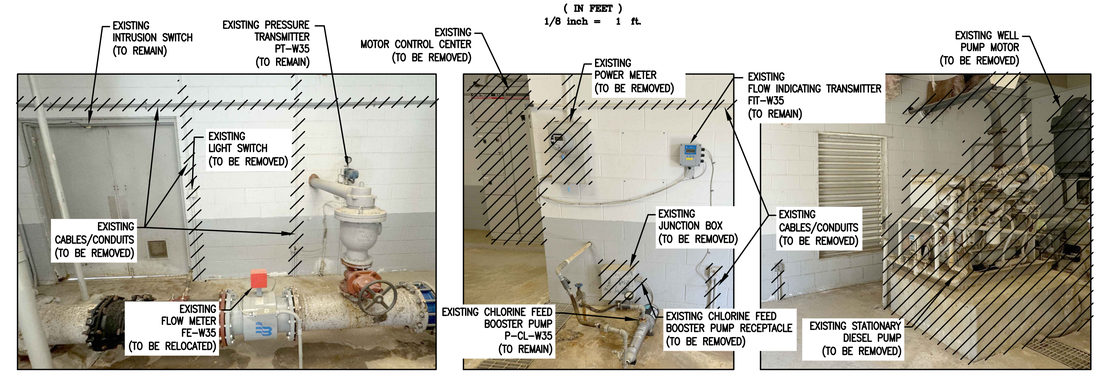

3 WELL PUMP BUILDING #35 – WELL PUMP ROOM
(DEMOLITION SCOPE)

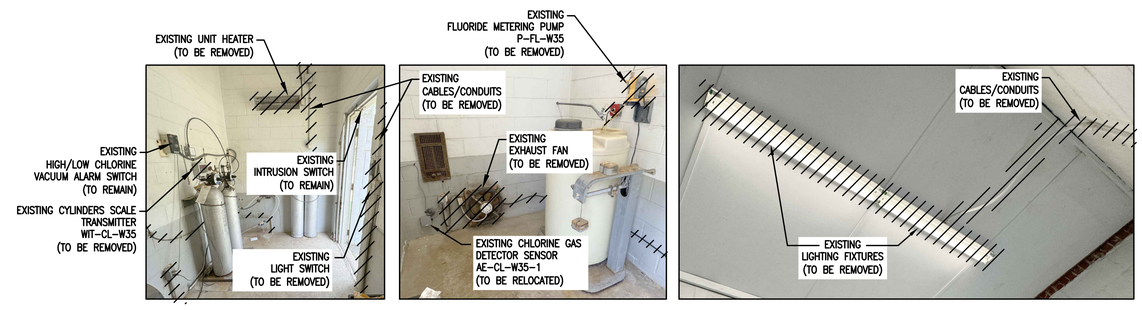

4 WELL PUMP BUILDING #35 – CHEMICAL ROOM
(DEMOLITION SCOPE)

NOTES:

1. THE CONTRACTOR SHALL REMOVE ALL EXISTING ELECTRICAL EQUIPMENT AS INDICATED (INCLUDING ALL LIGHTING FIXTURES, RECEPTACLES, SWITCHES, ETC.) WITH CABLES AND CONDUITS INSIDE THE WELL PUMP BUILDING. FOR DEVICES SPECIFIED TO REMAIN IN PLACE, THE CONTRACTOR SHALL KEEP THE EXISTING CABLES UNLESS SPECIFIED OTHERWISE, THE EXISTING CABLES SHALL BE INSTALLED IN NEW CONDUITS FOR PROPER PROTECTION.

LEGEND:

– EQUIPMENT TO BE DEMOLISHED

WELL PUMP HOUSE ELECTRICAL PLAN - DEMOLITION

EDEC, INC.
4120 CHATTAHOOCHEE TRACE
SUITE A
DULUTH, GEORGIA 30097
TEL. (770) 493-8685
EDEC A SALAS O'BRIEN COMPANY

Revision	Date
A	08/13/25

STILL WATERS ENGINEERING
130 VETERINARY WAY, UNIT 2, LEESBURG, GA. 31763, 229.496.5700
WWW.STILLWATERSENG.COM

WELL No. 35 UPGRADES
FOR THE
CITY OF ALBANY UTILITIES DIVISION
DOUGHERTY COUNTY, GEORGIA

GEORGIA REGISTERED PROFESSIONAL ENGINEER No. 30137 DENIS VYSTROPOV

Project No.	Date:
A1202.014	AUG 2025
Scale: AS SHOWN	Designed By: DV

SHEET #:
E-4
OF 9 SHEETS

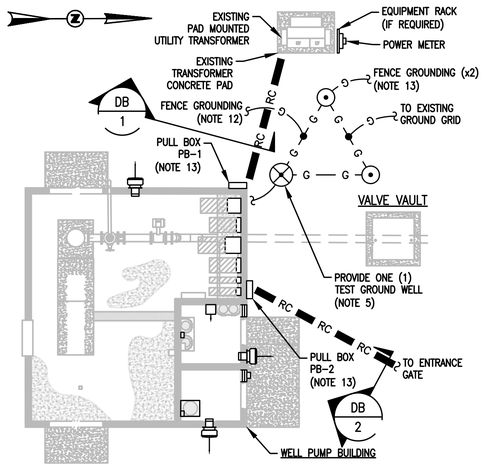

1 WELL PUMP BUILDING #35 OVERALL POWER PLAN

SCALE: 1/8" = 1'-0"

GRAPHIC SCALE

8 0 4 8 16 32

(IN FEET)
1/8 inch = 1 ft.

NOTES:

1. THE CONTRACTOR SHALL COORDINATE ROUTING OF ALL ELECTRICAL CONDUITS WITH OTHER UTILITIES TO AVOID CONFLICTS AND ADJUST AS NEEDED.
2. THE CONTRACTOR SHALL PROVIDE AND INSTALL A RADIANT HEATER BY AITKEN PRODUCTS, INC, MODEL #: SQHL 169 RATED FOR 208V, 1PH, 1600W WITH CORROSION RESISTANT THERMOSTAT AT THE LOCATIONS SHOWN.
3. THE CONTRACTOR SHALL CONNECT WELL PUMP STEEL BASE TO THE GROUND GRID WITH #1 BASE COPPER CONDUCTOR.
4. THE CONTRACTOR SHALL COORDINATE ACTUAL UTILITY TRANSFORMER LOCATION IN THE FIELD AND ADJUST SECONDARY CABLES/CONDUITS ROUTING ACCORDINGLY. UTILITY COMPANY SHALL PROVIDE AND INSTALL HIGH VOLTAGE PRIMARIES FROM POINT OF SERVICE TO NEW TRANSFORMER.
5. THE CONTRACTOR SHALL PROVIDE A GROUND GRID CONSISTING OF 3/4" DIA. x 10'-0" LONG COPPER CLAD GROUND RODS. THE RODS SHALL BE DRIVEN IN GROUND CONNECTED TOGETHER WITH #1 AWG BARE STRANDED COPPER CONDUCTORS. PROVIDE A GROUND WELL FOR ONE ROD. SEE DETAIL "B" AND "C" ON DWG. E-9 FOR GROUND WELL INSTALLATION DETAILS.
6. THE CONTRACTOR SHALL PROVIDE AND INSTALL 16"X16" MOTORIZED LOUVERS IN PLACE SHOWN ON THIS DRAWING. NEW LOUVERS SHALL BE CORROSION RESISTANT RATED GREENHECK MODEL#: ECD-601 OR APPROVED EQUAL. REFER TO LOUVERS SCHEDULE BELOW FOR ADDITIONAL DETAILS. SEE DETAIL "3" ON THIS SHEET FOR FAN AND LOUVER WIRING DIAGRAM.
7. THE CONTRACTOR SHALL COORDINATE THE ELECTRICAL EQUIPMENT INSTALLATION IN THE FILED TO MEET NEC WORKING CLEARANCE REQUIREMENTS. THE CONTRACTOR SHALL ADJUST INSTALLATION ACCORDINGLY IN THE FIELD AT NO ADDITIONAL COST TO THE OWNER.
8. THE CONTRACTOR SHALL PROVIDE AND INSTALL A CONDUIT TO REROUTE EXISTING INTRUSION SWITCH WIRING TO THE EXISTING PLC CABINET (PLC-W35). ROUTE THE CONDUIT IN A SUCH WAY, SO THE EXISTING WIRING IS LONG ENOUGH TO REACH THE PLC PANEL WITHOUT SPLICING.
9. THE CONTRACTOR SHALL PROVIDE AND INSTALL INTRUSION SWITCH AND CONNECT TO THE EXISTING PLC CABINET. THE SWITCH SHALL BE BY BANNER, MODEL QS18VP6DQ8, INCLUDING VENDOR SUPPLIED CABLE LONG ENOUGH TO REACH PLC CABINET WITHOUT SPLICING. THE WIRING SHALL BE INSTALLED IN 0.75" CONDUIT. ALL SOFTWARE, HARDWARE AND PROGRAMMING MODIFICATIONS TO THE PLC SHALL BE BY THE CITY.
10. ALL OUTDOOR TOGGLE SWITCHES SHALL BE WEATHER PROOF TYPE.
11. THE CONTRACTOR SHALL PROVIDE AND INSTALL THREE (3) COMBINATION MOTOR STARTERS FOR EXHAUST FANS OPERATION. SEE DETAIL "3" ON THIS SHEET FOR SCHEMATIC WIRING DIAGRAM.
12. THE CONTRACTOR SHALL GROUND FENCE AT TWO (2) PLACES AS REQUIRED BY NEC ARTICLE 250.194
13. THE CONTRACTOR SHALL PROVIDE AND INSTALL A NEMA 3R PULL BOX ADEQUATELY SIZED FOR ASSOCIATED CABLES AND CONDUITS.
14. ONLY MAJOR UNDERGROUND CONDUITS ARE SHOWN FOR CLARITY. THE CONTRACTOR SHALL COORDINATE ALL UNDERGROUND CONDUIT RUNS WITH OTHER UNDERGROUND UTILITIES. DUCTBANKS UNDER THE ROAD AND UTILITY TRANSFORMER DUCTBANK SHALL BE CONCRETE ENCASED. SEE DETAIL "D" ON DWG. E-9.

UNDERGROUND DUCTBANKS:

1

DB-1

1 - 2" C. (480/277V POWER FROM UTILITY TRANSFORMER)

1

DB-2

1 - 1" C. (RESERVED FOR FUTURE SECURITY SENSOR AT ENTRANCE GATE)

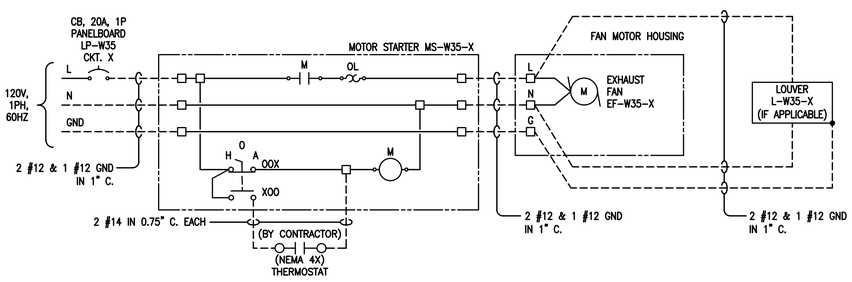

#	EXHAUST FAN	LOUVER	MANUAL MOTOR STARTER	ENCLOSURE TYPE	PANELBOARD, LP-W33	ROOM
1	EF-W35-1	L-W35-1	MS-W35-1	NEMA 3R	CKT. 3	FLUORIDE
2	EF-W35-2	L-W35-2	MS-W35-2	NEMA 3R	CKT. 2	CHLORINE
3	EF-W35-3	FIXED (WALL MOUNTED)	MS-W35-3	NEMA 1	CKT. 1	WELL PUMP

NOTES:

1. THE CONTRACTOR SHALL FURNISH AND INSTALL ENCLOSED MOTOR STARTER WHICH INCLUDES ALL NECESSARY POWER AND CONTROLS COMPONENTS INCLUDING, BUT NOT LIMITED TO THE FOLLOWING:
   A. CABINET SCCR SHALL BE 10kAIC MINIMUM.
   B. FULL VOLTAGE NON-REVERSING (FVNR) IEC TYPE NON-COMBINATION MOTOR STARTER, RATED FOR 1HP MOTOR.
   C. SELECTOR SWITCHES:
      C.A. HOA SWITCH.
   D. CABINET SHALL INCLUDE ALL NECESSARY COMPONENTS FOR EQUIPMENT SAFE AND RELIABLE OPERATION.

THE CABINET SHALL BE MANUFACTURED BY EATON, SCHNEIDER ELECTRIC, ALLEN-BRADLEY, ABB, SIEMENS OR APPROVED EQUAL MANUFACTURER, THE CABINET SHALL BE UL LISTED AND LABELED. CONTRACTOR SHALL SUBMIT DETAILED WIRING DIAGRAM AND BOM FOR THE CONTROL PANEL TO ENGINEER FOR APPROVAL, PRIOR TO FABRICATION.

EXHAUST FAN SCHEDULE

MARK	CFM	DRIVE TYPE	MOTOR WATTS/HP	MAX FAN RPM	POWER/PHASE	LAY-OUT BASIS: MASTER FLOW	NOTES
EF-W35-1	1,600	DIRECT	140 / 1/9HP	1185	115/1	EGV6HT	1, 2, 3, 5
EF-W35-2	1,600	DIRECT	140 / 1/9HP	1185	115/1	EGV6HT	1, 2, 3, 5
EF-W35-3	1,600	DIRECT	140 / 1/9HP	1185	115/1	EGV6HT	2, 4, 5

NOTES:

1. VERIFY ELECTRIC POWER REQUIREMENTS WITH ELECTRICAL PLANS, WHICH TAKE PRECEDENCE OVER THIS INFORMATION. BOTTOM OF FAN AT 12" AFF. COORDINATE EXACT ELEVATION WITH ARCHITECT.
2. CENTRIFUGAL WALL MOUNT FAN. PROVIDE WALL MOUNTING BRACKET, GRAVITY SHUTTER WITH BUG SCREEN, EC MOTOR.
3. FAN SHALL BE CONTROLLED BY A 120V, 20A, 1PH MOTOR STARTER LOCATED ON EXTERIOR WALL OF THE ROOM.
4. VERIFY ELECTRIC POWER REQUIREMENTS WITH ELECTRICAL PLANS, WHICH TAKE PRECEDENCE OVER THIS INFORMATION. BOTTOM OF FAN AT 10 FT AFF.
5. FAN SHALL BE CONTROLLED BY CORROSION RESISTANT THERMOSTAT. THERMOSTAT SHALL BE 120V, SPDT IN NEMA 4X HOUSING, CHROMOLOX MODEL WCRT-100 OR EQUAL.

LOUVERS SCHEDULE

MARK	SIZE W X H (INCHES)	MIN FREE AREA (SQ. FT.)	MAXIMUM PRESS. DROP (IN. W.G.)	MOTOR OPERATOR	LAY-OUT BASIS: GREENHECK	NOTES
L-W35-1	16"X16"	0.62	0.08	YES	GREENHECK ECD-601	1, 2, 3
L-W35-2	16"X16"	0.62	0.08	YES	GREENHECK ECD-601	1, 2, 3

NOTES:

1. INSTALL LOUVER AS HIGH AS POSSIBLE, MAINTAINING - 12" CLEARANCE TO THE CEILING.
2. COMBINATION LOUVER/DAMPER ASSEMBLY. PROVIDE MANUFACTURER'S ELECTRIC MOTOR ACTUATORS BELIMO, SEIMANS GGD WITH 6" PROJECTION. INTERLOCK DAMPER TO OPEN WITH EACH LOUVER. PROVIDE BIRD AND INSECT SCREEN.
3. STATIONARY EXTRUDED ALUMINUM LOUVER. PROVIDE CORROSION RESISTANCE KYNER FINISH. PROVIDE BIRD AND INSECT SCREEN. COORDINATE COLOR WITH HE CITY (PROVIDE COLOR SAMPLES WITH SUBMITTAL).

3 EXHAUST FAN AND LOUVER WIRING DIAGRAM

LEGEND:

RC RC - REINFORCED CONCRETE ENCASED UNDERGROUND DUCTBANK

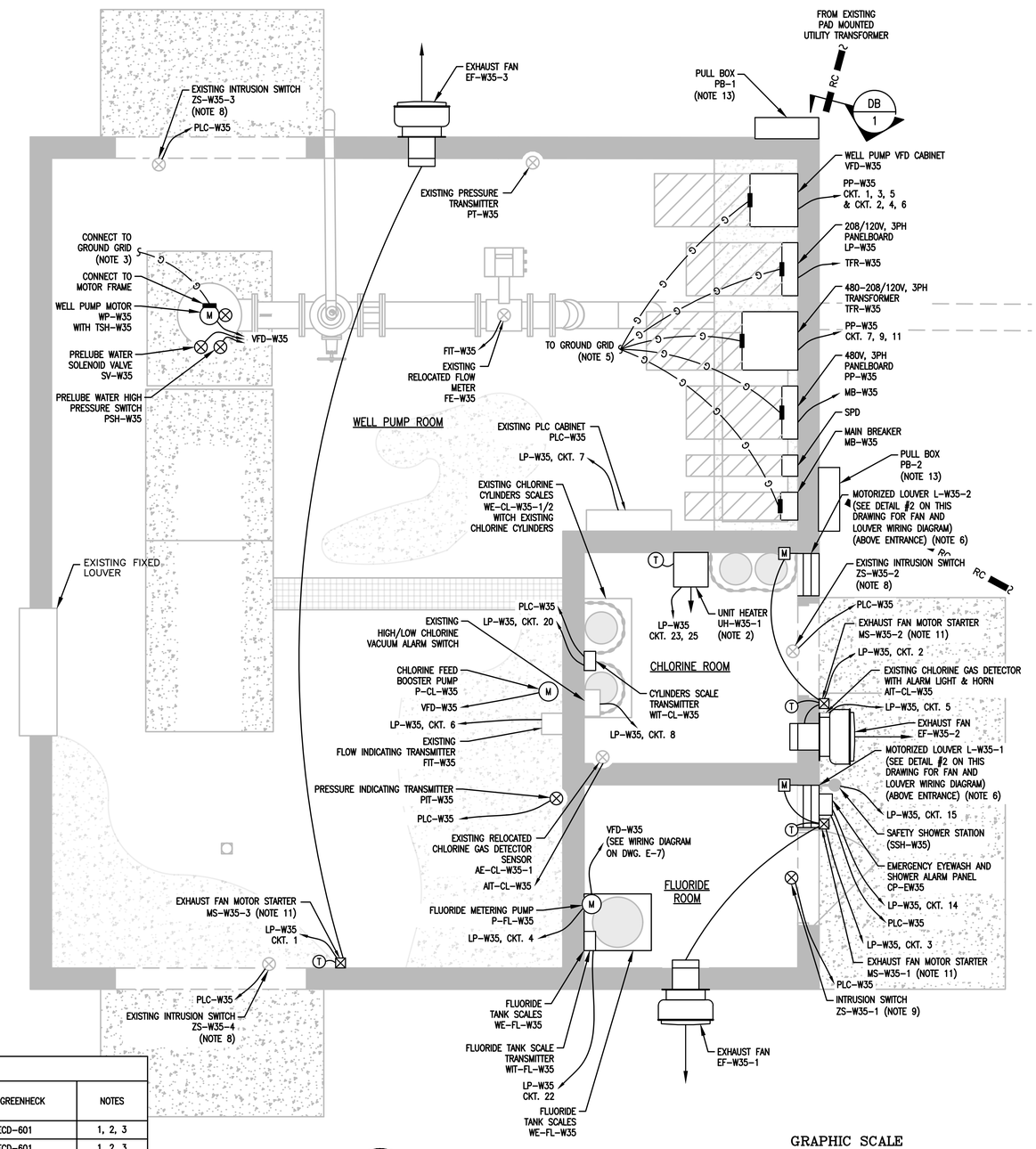

2 WELL PUMP BUILDING #35 POWER PLAN

SCALE: 1/2" = 1'-0"

GRAPHIC SCALE

2 0 1 2 4 8

(IN FEET)
1/2 inch = 1 ft.

WELL PUMP HOUSE ELECTRICAL PLAN

EDEC, INC.
4120 CHATTAHOOCHEE TRACE
SUITE A
DULUTH, GEORGIA 30097
TEL. (770) 493-8685
EDEC A SALAS O'BRIEN COMPANY

Revision	Date
A	08/13/25

STILL WATERS ENGINEERING
130 VETERINARY WAY, UNIT 2, LEESBURG, GA. 31763, 229.496.5700
WWW.STILLWATERSENG.COM

WELL No. 35 UPGRADES
FOR THE
CITY OF ALBANY UTILITIES DIVISION
DOUGHERTY COUNTY, GEORGIA

GEORGIA REGISTERED No. 50137 PROFESSIONAL ENGINEER DENIS VYSTROPOV

Project No. A1202.014	Date: AUG 2025
Scale: AS SHOWN	Designed By: DV

SHEET #: E-5
OF 9 SHEETS

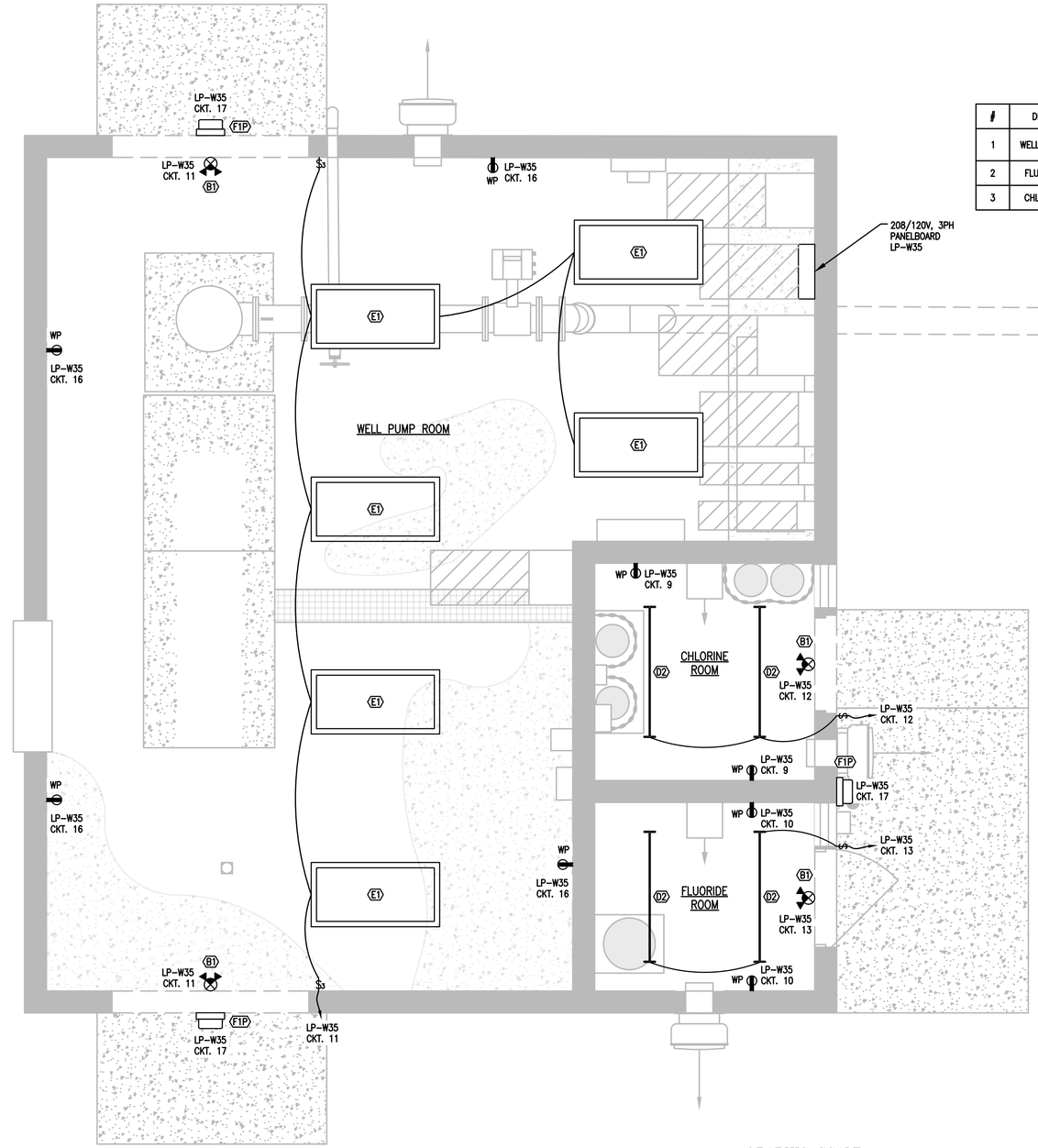

1 WELL PUMP BUILDING #35 LIGHTS & RECEPTACLES PLAN

SCALE: 1/2" = 1'-0"

GRAPHIC SCALE

2 0 1 2 4 8

(IN FEET)
1/2 inch = 1 ft.

#	DESCRIPTION	MIN	MAX	AVERAGE
1	WELL PUMP ROOM	10.3 FC	52.3 FC	33.6 FC
2	FLUORIDE ROOM	21.1 FC	27.2 FC	24.4 FC
3	CHLORINE ROOM	20.3 FC	26.8 FC	24.1 FC

NOTES:

1. ALL RECEPTACLES AND LIGHT SWITCHES IN CHEMICAL ROOMS SHALL BE CORROSION RESISTANT TYPE.
2. THE CONTRACTOR SHALL CONNECT EMERGENCY LIGHTING AHEAD OF LOCATING SWITCH.
3. DO NOT MOUNT LUMINARIES DIRECTLY ABOVE PIPES OR DUCTS. COORDINATE IN THE FIELD FOR INTERFERENCES.
4. ALL OUTDOOR TOGGLE SWITCHES SHALL BE WEATHER PROOF TYPE.

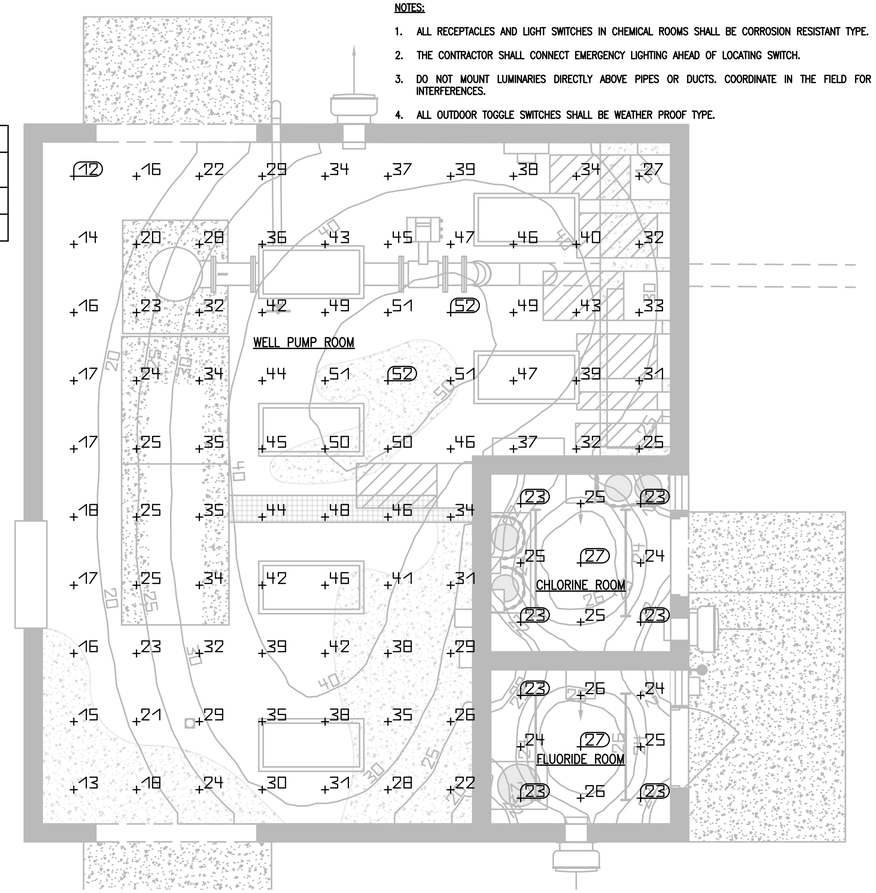

2 WELL PUMP BUILDING #35 – PHOTOMETRIC PLAN

SCALE: 3/8" = 1'-0"

GRAPHIC SCALE

2.67 0 1.33 2.67 5.33 10.67

(IN FEET)
3/8 inch = 1 ft.

LIGHTING/POLE SCHEDULE

SYMBOL/TYPE	DESCRIPTION	INSTALLATION ENVIRONMENT	HAZARDOUS AREA	LAMP/VOLTAGE	MOUNTING
E1	RECESSED CEILING 2' X 4' INDOOR LIGHT FIXTURE COLOR TEMPERATURE: 4000K ACCESSORIES: NONE BASIS OR DESIGN: BRAND: LITHONIA MODEL #: 2GTL-4-48L-RW-A19-LP840-N100	INDOOR; NON-CORROSIVE; DRY	N/A	LED 120-277V, 1PH 39.75WATTS	CEILING/ SURFACE
D2	INDUSTRIAL STRIP LIGHT, 4FT ENCLOSURE COLOR: WHITE COLOR TEMPERATURE: 4000K ACCESSORIES: NONE BASIS OR DESIGN: BRAND: LITHONIA MODEL #: FEM-L48-4000LM-IMACD-WD-MVOLT-40K-80CRI-WLFEND2	INDOOR AND OUTDOOR; CORROSIVE & NON-CORROSIVE; DRY, DAMP AND WET	N/A	LED 120/277V, 1PH 34WATTS	CEILING/ SURFACE
F1P	INDUSTRIAL WALLPACK FIXTURE (ADJUSTABLE LIGHT OUTPUT) ENCLOSURE COLOR: DARK BRONZE COLOR TEMPERATURE: 4000K ACCESSORIES: PHOTOCELL BASIS OR DESIGN: BRAND: LITHONIA MODEL #: TWPLED-ALO-40K-T3M-MVOLT-DDBXD-PE	INDOOR AND OUTDOOR; CORROSIVE & NON-CORROSIVE; DRY, DAMP AND WET	N/A	LED 120/277V, 1PH 11-48WATTS	WALL/ SURFACE
B1	EMERGENCY LIGHT/EXIT COMBO FIXTURE COLOR: WHITE ACCESSORIES: INTERNAL BATTERY BASIS OR DESIGN: BRAND: LITHONIA MODEL #: LHQM-LED-R-R0	INDOOR & OUTDOOR; CORROSIVE & NON-CORROSIVE; DRY AND DAMP	N/A	LED 120/277V, 1PH 6WATTS	CEILING/ WALL/ SURFACE

NOTE:

DESIGN IS BASED ON THE EQUIPMENT SHOWN IN THE ABOVE SCHEDULE. LIGHTS AND POLE SHALL BE PROVIDED AND INSTALLED BY CONTRACTOR PER SCHEDULE. ANY SUBSTITUTIONS SHALL BE APPROVED BY ENGINEER PRIOR TO PURCHASE/INSTALLATION.

WELL PUMP HOUSE LIGHTS & RECEPTACLES PLAN

EDEC
A SALAS O'BRIEN COMPANY
EDEC, INC.
4120 CHATTAHOOCHEE TRACE
SUITE A
DULUTH, GEORGIA 30097
TEL. (770) 493-8685

Revision	Date
A	08/13/25

STILL WATERS ENGINEERING
130 VETERINARY WAY, UNIT 2, LEESBURG, GA. 31763, 229.496.5700
WWW.STILLWATERSENG.COM

WELL No. 35 UPGRADES
FOR THE
CITY OF ALBANY UTILITIES DIVISION
DOUGHERTY COUNTY, GEORGIA

GEORGIA REGISTERED PROFESSIONAL ENGINEER No. 50137 DENIS VYSTROPOV

Project No.	Date:
A1202.014	AUG 2025
Scale: AS SHOWN	Designed By: DV

SHEET #:
E-6
OF 9 SHEETS

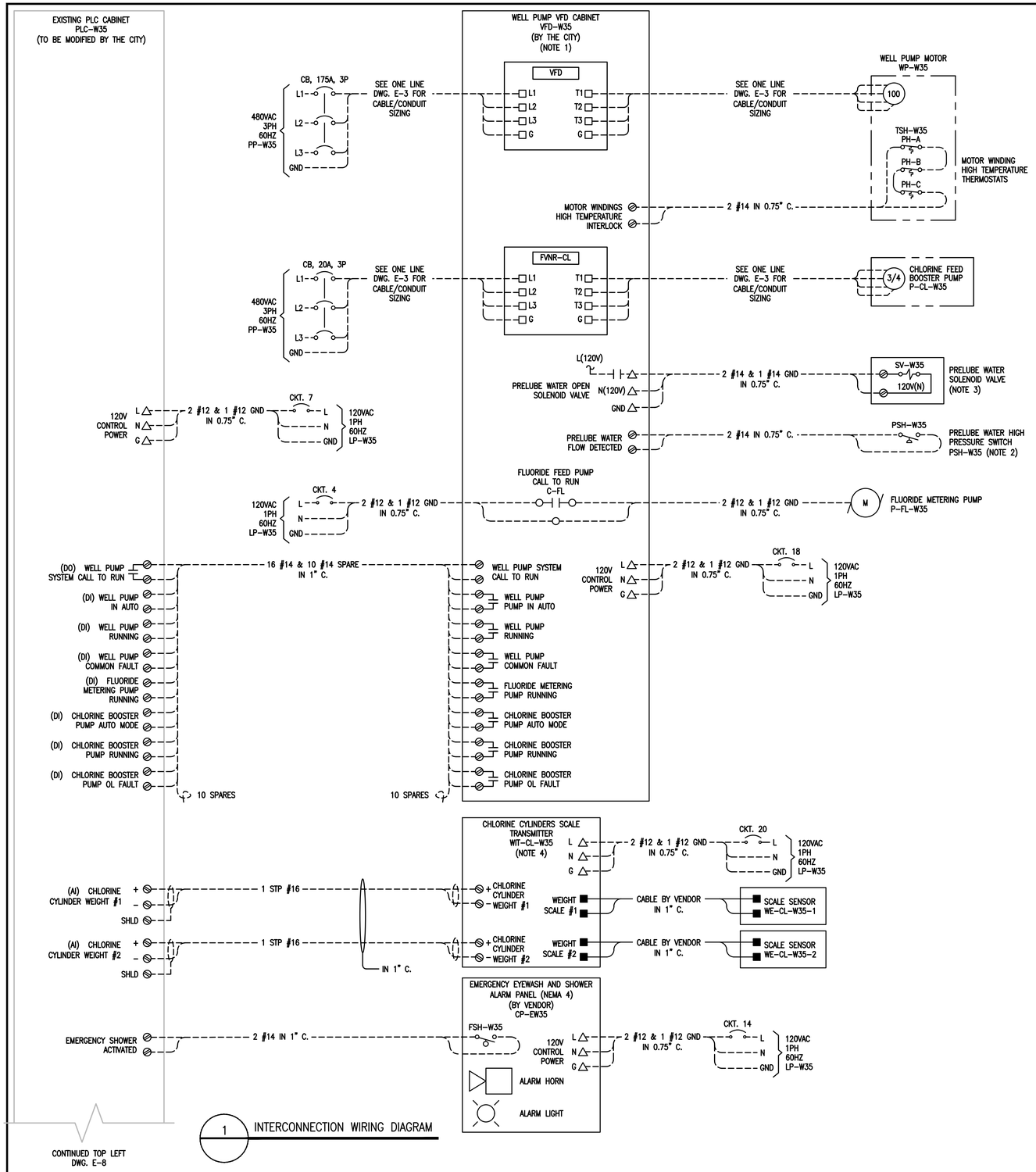

1 INTERCONNECTION WIRING DIAGRAM

LEGEND:

- ☐ – 480V POWER TERMINAL
- ⊘ – CONTROL TERMINAL
- △ – LOW VOLTAGE POWER TERMINAL
- ■ – DEVICE TERMINAL

NOTES:

1. WELL PUMP VFD CABINET SHALL BE PROVIDED BY CITY AND INSTALLED BY CONTRACTOR. WELL PUMP VFD CABINET SHALL INCLUDE AS A MINIMUM THE FOLLOWING:
   - A. THE CABINET ASSEMBLY SHALL BE 42kAIC RATED MINIMUM.
   - B. NEMA 1 ENCLOSURE.
   - C. VARIABLE FREQUENCY DRIVE (VFD) 480V, 3PH RATED FOR 100HP MOTOR WITH MOTOR CIRCUIT PROTECTORS.
   - D. FULL VOLTAGE NON-REVERSING (FVNR) MOTOR STARTER RATED FOR 3/4HP MOTOR WITH MOTOR CIRCUIT PROTECTORS.
   - E. AUXILIARY DRY CONTACTS (120VAC, 5 AMP RATED):
     - E.1. WELL PUMP RUNNING;
     - E.2. WELL PUMP IN AUTO MODE;
     - E.3. WELL PUMP COMMON FAULT (COMBINATION OF RVSS FAULT AND MOTOR WINDING HIGH TEMPERATURE);
     - E.4. FLUORIDE BOOSTER PUMP RUNNING;
     - E.5. CHLORINE BOOSTER PUMP AUTO MODE;
     - E.6. CHLORINE BOOSTER PUMP RUNNING;
     - E.7. CHLORINE BOOSTER PUMP OL FAULT.
   - F. INDICATING LIGHTS FOR:
     - F.1. PUMP RUNNING (GREEN);
     - F.2. PUMP STOPPED (RED);
     - F.3. PUMP FAULT (AMBER).
   - G. RELAYS, FUSES, TERMINALS, "HAND-OFF-AUTO" SELECTOR SWITCH AND ALL OTHER COMPONENTS AS REQUIRED FOR PROPER PUMP OPERATION.
   - H. TIMER RELAY FOR PRELUBE WATER SOLENOID VALVE. TIMER SHALL BE TIME DELAY ON TYPE 0-10 MINUTE TIME DELAY. THE TIMER SHALL BE ELECTRONIC WITH SET-POINT ADJUSTMENT INTERFACE MOUNTED ON THE RVSS CABINET FRONT.
   - I. VFD CONTROL CABINET SHALL INCLUDE ALL INTERLOCKS AND RELAYS TO DUPLICATE THE FUNCTIONALITY OF THE EXISTING MOTOR STARTER CABINET.
   - J. INCLUDE 120V COIL, 20A, 2P, CONTACTOR C-FL TO BE CLOSED WHEN THE WELL PUMP IS RUNNING.

   THE SCHEMATIC WIRING DIAGRAM IS CONCEPTUAL IN NATURE. THE CONTRACTOR SHALL COORDINATE THE WIRING WITH THE ACTUAL CITY SUPPLIED VFD CABINET AND SHALL ADJUST NUMBER OF CABLES/CONDUITS ACCORDINGLY.

2. THE CONTRACTOR SHALL PROVIDE AND INSTALL PRE-LUBE WATER PRESSURE SWITCH WITH 120V, 2A RATED CONTACT. THE SWITCH SHALL BE RATED FOR POTABLE WATER APPLICATION.

3. THE CONTRACTOR SHALL PROVIDE AND INSTALL 120V RATED SPRING RETURN SOLENOID VALVE TO CONTROL PRELUBE WATER FLOW. SEE CONTROL STRATEGY ON THIS DRAWING FOR ADDITIONAL DETAILS.

4. THE CONTRACTOR SHALL PROVIDE AND INSTALL CHLORINE GAS CYLINDERS SCALE WHICH INCLUDES THE FOLLOWING FEATURES:
   - A. SCALE PLATFORM(S):
     - A.A. CAPACITY: TWO (2) CYLINDER;
     - A.B. SIZE: COORDINATE WITH THE PROCESS ENGINEER;
     - A.C. CONSTRUCTION: NON-CORROSIVE PVC PLASTIC.
   - B. SCALE TRANSMITTER:
     - B.A. ENCLOSURE: NEMA 4X;
     - B.B. INPUT POWER: 120V, 1PH;
     - B.C. CONTROL OUTPUT: 4-20mA (2-CHANNEL).

   BASIS OF DESIGN: SCALE – FORCE FLOW, MODEL WR 150-2; TRANSMITTER – FORCE FLOW, MODEL #: WIZARD 4000 SERIES.

CONTROL STRATEGY:

1. LOCAL MODE:
   - A. WHEN L-O-R SWITCH IS PLACED IN LOCAL POSITION, THE PUMP SHALL BE OPERATED BY VFD START/STOP PUSHBUTTONS. WHEN START PUSH BUTTON IS PRESSED, THE PRELUBE SOLENOID VALVE SHALL OPEN SUPPLYING WATER TO THE PUMP. CLOSURE OF THE PRELUBE WATER HIGH PRESSURE SWITCH CONTACT SHALL START THE COUNTDOWN OF THE PRESET TIME DELAY ON THE TIMER. AFTER THE DELAY IS EXPIRED, THE PUMP SHALL START AND RUN CONTINUOUSLY. THE PRELUBE VALVE SHALL CLOSE WHEN THE PUMP STARTS. WHEN THE WELL PUMP STARTS, THE RELAY "CR-FL" AND STARTER "FVNR-CL" SHALL BE ENERGIZED, STARTING FLUORIDE PUMP AND CHLORINE BOOSTER PUMP. CHEMICALS INJECTION RATE SHALL BE MANUALLY SET AT THE FLUORIDE METERING PUMP AND AT THE GAS CHLORINATOR. ONCE THE WELL PUMP OPERATION COMES TO A STOP, RELAY "CR-FL" AND STARTER "FVNR-CL" WILL BE DE-ENERGIZED AND FLUORIDE AND CHLORINE BOOSTER PUMP SHALL STOP.
   - B. RVSS STARTING/RUNNING CIRCUIT HARDWIRE INTERLOCKS SHALL INCLUDE:
     - B.1. HIGH MOTOR WINDING TEMPERATURE;
     - B.2. VFD FAULT.

2. REMOTE MODE:
   - A. WHEN L-O-R SWITCH IS PLACED IN REMOTE POSITION, THE CONTROL OF THE PUMP START/STOP SHALL COME FROM THE EXISTING RTU-W33 DRY "CALL TO RUN" CONTACT (TO BE INITIATED REMOTELY BY USER INPUT THROUGH SCADA SYSTEM). WHEN THE "CALL TO RUN" CONTACT CLOSES, THE PRELUBE WATER SOLENOID VALVE SHALL OPEN SUPPLYING WATER TO THE PUMP. CLOSURE OF THE PRELUBE WATER HIGH PRESSURE SWITCH CONTACT SHALL START THE COUNTDOWN OF THE PRESET TIME DELAY ON THE TIMER. AFTER THE DELAY IS EXPIRED, THE PUMP SHALL START AND RUN AS LONG AS SCADA "CALL TO RUN" CONTACT IS CLOSED. THE PRELUBE VALVE SHALL CLOSE WHEN THE WELL PUMP STARTS. WHEN THE WELL PUMP STARTS, THE RELAY "CR-FL" AND STARTER "FVNR-CL" SHALL BE ENERGIZED, STARTING FLUORIDE PUMP AND CHLORINE BOOSTER PUMP. CHEMICALS INJECTION RATE SHALL BE MANUALLY SET AT THE FLUORIDE METERING PUMP AND AT THE GAS CHLORINATOR. ONCE THE WELL PUMP OPERATION COMES TO A STOP, RELAY "CR-FL" AND STARTER "FVNR-CL" WILL BE DE-ENERGIZED AND FLUORIDE AND CHLORINE BOOSTER PUMP SHALL STOP.
   - B. RVSS STARTING/RUNNING CIRCUIT HARDWIRE INTERLOCKS SHALL INCLUDE:
     - B.1. HIGH MOTOR WINDING TEMPERATURE;
     - B.2. VFD FAULT.
   - C. PUMP STARTING/RUNNING SCADA INTERLOCKS SHALL REMAIN THE SAME AS FOR THE EXISTING MOTOR STARTER.

SCHEMATIC WIRING DIAGRAM

EDEC, INC.
4120 CHATTAHOOCHEE TRACE
SUITE A
DULUTH, GEORGIA 30097
TEL. (770) 493-8685
EDEC A SALAS O'BRIEN COMPANY

Revision	Date
A	08/13/25

STILL WATERS ENGINEERING
130 VETERINARY WAY, UNIT 2, LEESBURG, GA. 31763, 229.496.5700
WWW.STILLWATERSENG.COM

WELL No. 35 UPGRADES
FOR THE
CITY OF ALBANY UTILITIES DIVISION
DOUGHERTY COUNTY, GEORGIA

GEORGIA REGISTERED PROFESSIONAL ENGINEER No. 50137 DENIS VYSTROPOV

Project No.	Date:
A1202.014	AUG 2025
Scale: N.T.S.	Designed By: DV

SHEET #: E-7
OF 9 SHEETS

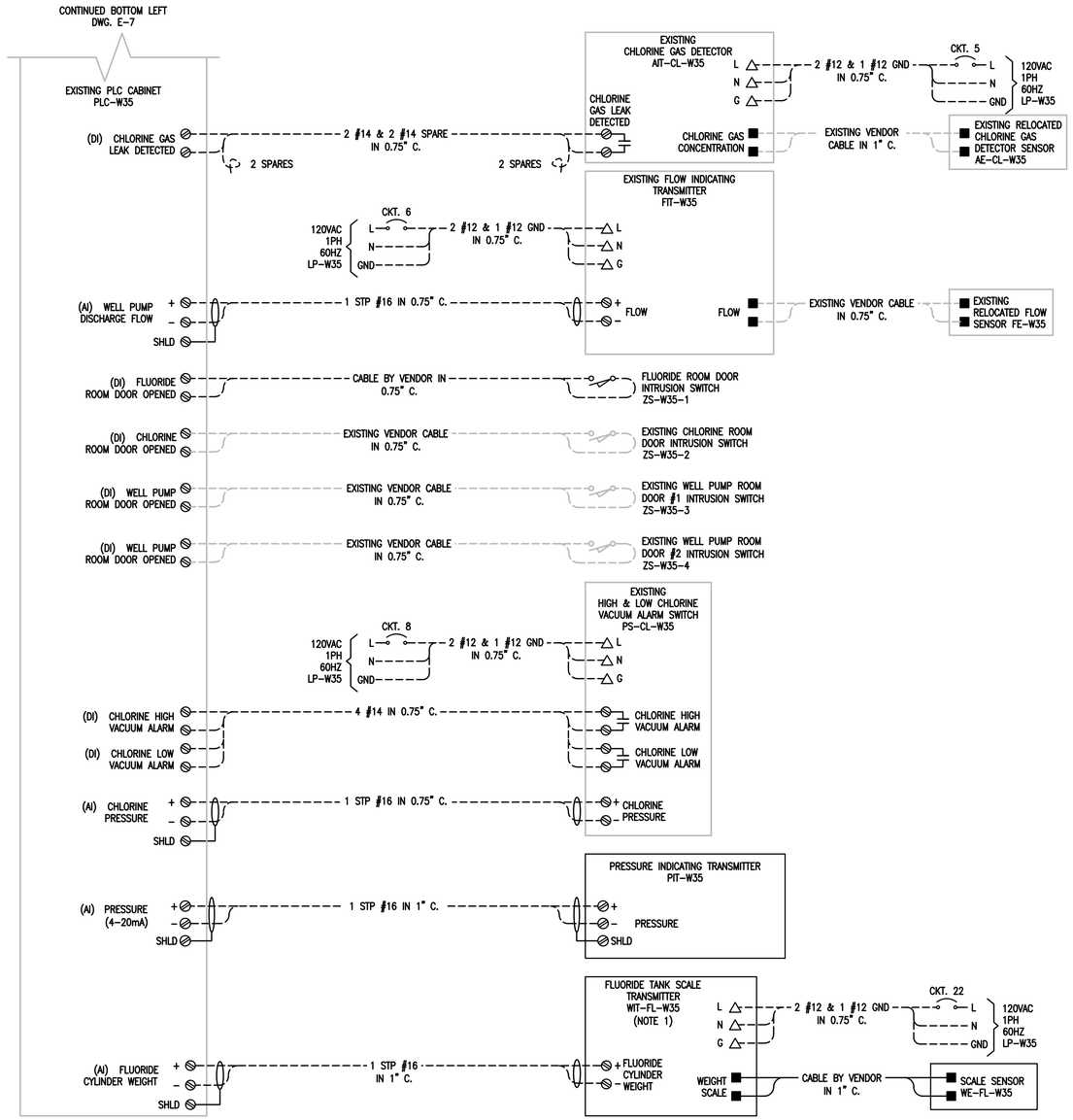

1 INTERCONNECTION WIRING DIAGRAM

LEGEND:

- ☐ – 480V POWER TERMINAL
- ⊘ – CONTROL TERMINAL
- △ – LOW VOLTAGE POWER TERMINAL
- ■ – DEVICE TERMINAL

NOTES:

1. THE CONTRACTOR SHALL PROVIDE AND INSTALL FLUORIDE TANK SCALE WHICH INCLUDES THE FOLLOWING FEATURES:
   A. SCALE PLATFORM(S):
      A.A. CAPACITY: ONE (1) CYLINDER;
      A.B. SIZE: COORDINATE WITH THE PROCESS ENGINEER;
      A.C. CONSTRUCTION: NON-CORROSIVE PVC PLASTIC.
   B. SCALE TRANSMITTER:
      B.A. ENCLOSURE: NEMA 4X;
      B.B. INPUT POWER: 120V, 1PH;
      B.C. CONTROL OUTPUT: 4-20mA (1-CHANNEL).
   BASIS OF DESIGN: SCALE – FORCE FLOW, MODEL PZ-31-VEC-F; TRANSMITTER – FORCE FLOW, MODEL #: WIZARD 4000 SERIES.

Revision	Date
A	08/13/25

STILL WATERS ENGINEERING
130 VETERINARY WAY, UNIT 2, LEESBURG, GA. 31763, 229.496.5700
WWW.STILLWATERSENG.COM

WELL No. 35 UPGRADES
FOR THE
CITY OF ALBANY UTILITIES DIVISION
DOUGHERTY COUNTY, GEORGIA

GEORGIA REGISTERED No. 50137 PROFESSIONAL ENGINEER DENIS VYSTROPOV

Project No.	Date:
A1202.014	AUG 2025
Scale: N.T.S.	Designed By: DV

SHEET #: E-8
OF 9 SHEETS

SCHEMATIC WIRING DIAGRAM

EDEC
A SALAS O'BRIEN COMPANY
EDEC, INC.
4120 CHATTAHOOCHEE TRACE
SUITE A
DULUTH, GEORGIA 30097
TEL. (770) 493-8685

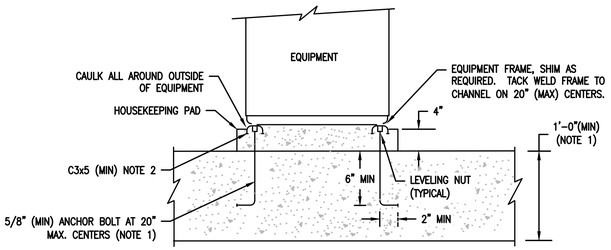

NOTES:
1. IF SLAB IS LESS THAN 12" THICK, ANCHOR BOLTS SHALL EXTEND THROUGH SLAB AND BE BACKED UP WITH 4" X 3/16" (MIN) SQUARE WASHERS.
2. CHANNELS SHALL BE LEVELED AT TIME CONCRETE IS CAST.

A TYPICAL FLOOR MOUNTING EQUIPMENT DETAIL

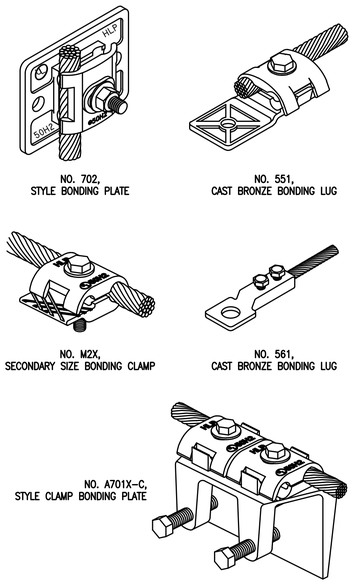

B BONDING LUGS AND PLATES

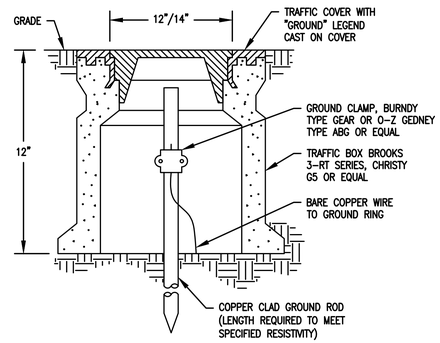

C GROUND TEST WELL

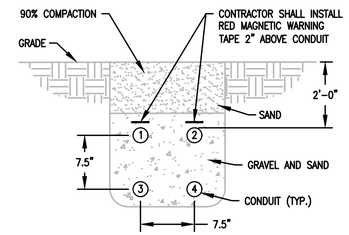

NOTES:

1. NUMBER AND SIZE OF ELECTRICAL CONDUITS SHALL BE AS INDICATED ON THE DESIGN DRAWINGS.
2. BOND THE GROUNDING CONDUCTOR TO ALL GROUNDING ELECTRODES ALONG THE DUCT BANK ROUTE, INCLUDING THE BUILDING's GROUNDING ELECTRODE AT BOTH ENDS OF THE DUCT BANK.
5. INSTALL SADDLE-TYPE CONDUIT SPACERS AT INTERVALS OF 8'-0" OR AS OTHERWISE SPECIFIED BY THE MANUFACTURER's RECOMMENDATIONS.

D CONDUIT SECTION IN TRENCH

ELECTRICAL INSTALLATION DETAILS

EDEC
A SALAS O'BRIEN COMPANY
EDEC, INC.
4120 CHATTAHOOCHEE TRACE
SUITE A
DULUTH, GEORGIA 30097
TEL. (770) 493-8685

Revision	Date
A	08/13/25

STILL WATERS
ENGINEERING
130 VETERINARY WAY, UNIT 2, LEESBURG, GA. 31763, 229.496.5700
WWW.STILLWATERSENG.COM

WELL No. 35 UPGRADES
FOR THE
CITY OF ALBANY UTILITIES DIVISION
DOUGHERTY COUNTY, GEORGIA

GEORGIA REGISTERED No. 50137 PROFESSIONAL ENGINEER DENIS VYSTROPOV

Project No.	Date:
A1202.014	AUG 2025
Scale: N.T.S.	Designed By: DV

SHEET #:
E-9
OF 9 SHEETS

CONTRACT DOCUMENTS & SPECIFICATIONS

WELL NO. 35 REHABILITATION & UPGRADES

PREPARED FOR THE:
CITY OF ALBANY UTILITIES DIVISION

Dougherty County, Georgia

August 2025

Still Waters Project No.: A1202.014

STILL WATERS ENGINEERING

Still Waters Engineering

130 Veterinary Way Unit - 2
Leesburg, GA 31763
229-496-5700

www.stillwaterseng.com

GEORGIA REGISTERED PROFESSIONAL ENGINEER No. 20577

8/14/25

CONTRACT DOCUMENTS & SPECIFICATIONS

WELL NO. 35 REHABILITATION & UPGRADES

PREPARED FOR THE:
CITY OF ALBANY UTILITIES DIVISION

Dougherty County, Georgia

AUGUST 2025

Still Waters Project No.: A1202.014

TABLE OF CONTENTS

DETAILED SPECIFICATIONS	SECTION
SUMMARY	011000
PRICE AND PAYMENT PROCEDURES	012000
SUBSTITUTION PROCEDURES	012500
ADMINISTRATIVE REQUIREMENTS	013000
SUBMITTAL PROCEDURES	013300
PRODUCT REQUIREMENTS	016000
EXECUTION AND CLOSEOUT REQUIREMENTS	017000
REPAIR OF LOW VOLTAGE INDUCTION MOTORS	160900
WATER DISTRIBUTION PIPING	331113
WATER DISTRIBUTION VALVES	331216
DISINFECTION OF WATER DISTRIBUTION	331300
WATER LUBRICATED VERTICAL TURBINE WELL PUMP	332113

BID FORM

Well No. 35 Rehabilitation & Upgrades

Project # A1202.014

City of Albany Utilities Division

1.01 This Bid is submitted to:

City of Albany Utilities Division

222 Pine Avenue, Suite 260

Albany, GA 31701

1.02 The undersigned Bidder proposes and agrees, if this Bid is accepted, to enter into an Agreement with Owner in the form included in the Bidding Documents to perform all Work as specified or indicated in the Bidding Documents for the prices and within the times indicated in this Bid and in accordance with the other terms and conditions of the Bidding Documents.

ARTICLE 2 – BIDDER'S ACKNOWLEDGEMENTS

2.01 Bidder accepts all of the terms and conditions of the Instructions to Bidders, including without limitation those dealing with the disposition of Bid security. This Bid will remain subject to acceptance for 60 days after the Bid opening, or for such longer period of time that Bidder may agree to in writing upon request of Owner.

ARTICLE 3 – BIDDER'S REPRESENTATIONS

3.01 In submitting this Bid, Bidder represents that:

A. Bidder has examined and carefully studied the Bidding Documents, and any data and reference items identified in the Bidding Documents, and hereby acknowledges receipt of the following Addenda:

Addendum No.	Addendum, Date
_____	_____
_____	_____

B. Bidder has visited the Site, conducted a thorough, alert visual examination of the Site and adjacent areas, and become familiar with and satisfied itself as to the general, local, and Site conditions that may affect cost, progress, and performance of the Work.

C. Bidder is familiar with and has satisfied itself as to all Laws and Regulations that may affect cost, progress, and performance of the Work.

D. Bidder has carefully studied all: (1) reports of explorations and tests of subsurface conditions at or adjacent to the Site and all drawings of physical conditions relating to existing surface or subsurface structures at the Site that have been identified in the Supplementary Conditions, especially with respect to Technical Data in such reports and drawings, and (2) reports and drawings relating to Hazardous Environmental Conditions, if any, at or adjacent to the Site that have been identified in the Supplementary Conditions, especially with respect to Technical Data in such reports and drawings.

E. Bidder has considered the information known to Bidder itself; information commonly known to contractors doing business in the locality of the Site; information and observations obtained from visits to the Site; the Bidding Documents; and any Site-related reports and drawings identified in the Bidding Documents, with respect to the effect of such information, observations, and documents on (1) the cost, progress, and performance of the Work; (2) the means, methods, techniques, sequences, and procedures of construction to be employed by Bidder; and (3) Bidder's safety precautions and programs.

F. Bidder agrees, based on the information and observations referred to in the preceding paragraph, that no further examinations, investigations, explorations, tests, studies, or data are necessary for the determination of this Bid for performance of the Work at the price bid and within the times required, and in accordance with the other terms and conditions of the Bidding Documents.

G. Bidder is aware of the general nature of work to be performed by Owner and others at the Site that relates to the Work as indicated in the Bidding Documents.

H. Bidder has given Engineer written notice of all conflicts, errors, ambiguities, or discrepancies that Bidder has discovered in the Bidding Documents and confirms that the written resolution thereof by Engineer is acceptable to Bidder.

I. The Bidding Documents are generally sufficient to indicate and convey understanding of all terms and conditions for the performance and furnishing of the Work.

J. The submission of this Bid constitutes an incontrovertible representation by Bidder that Bidder has complied with every requirement of this Article, and that without exception the Bid and all prices in the Bid are premised upon performing and furnishing the Work required by the Bidding Documents.

ARTICLE 4 – BIDDER'S CERTIFICATION

4.01 Bidder certifies that:

A. This Bid is genuine and not made in the interest of or on behalf of any undisclosed individual or entity and is not submitted in conformity with any collusive agreement or rules of any group, association, organization, or corporation;

B. Bidder has not directly or indirectly induced or solicited any other Bidder to submit a false or sham Bid;

C. Bidder has not solicited or induced any individual or entity to refrain from bidding; and

D. Bidder has not engaged in corrupt, fraudulent, collusive, or coercive practices in competing for the Contract. For the purposes of this Paragraph 4.01.D:

1. "Corrupt practice" means the offering, giving, receiving, or soliciting of any thing of value likely to influence the action of a public official in the bidding process;

2. "Fraudulent practice" means an intentional misrepresentation of facts made (a) to influence the bidding process to the detriment of Owner, (b) to establish bid prices at artificial non-competitive levels, or (c) to deprive Owner of the benefits of free and open competition;

3. "Collusive practice" means a scheme or arrangement between two or more Bidders, with or without the knowledge of Owner, a purpose of which is to establish bid prices at artificial, non-competitive levels; and

4. "
Coercive practice" means harming or threatening to harm, directly or indirectly,

persons or their property to influence their participation in the bidding process or affect the e execution of the Contract.

ARTICLE 5 – BASIS OF BID

5.01 Bidder will complete the Work in accordance with the Contract Documents for the following price(s):

BASE BID SCHEDULE

WELL NO. 24		
ITEM NO	DESCRIPTION	BID PRICE
1	Mobilization	
2	Test Pumping of Existing Well to Determine Current Yield, Pumping Water Level, Static Water Level, & Water Level Recovery Period	
3	Pull Existing Pump (Contractor shall record pump serial number from pump bowl and coordinate with manufacturer to provide existing pump curve) and Perform Video Inspection of Existing Well (Refer to Well Section Sheet in Section 011000)	
4	Demolish existing discharge piping and valves and replace with new piping & valves as shown on plan sheets to match up to new pump support base. (Price shall include all pipe, fittings, valves, coating of pipe, gaskets, bolts & nuts, re-connecting to pump discharge head, and reconnecting to existing piping. Pricing shall include all material, labor, equipment, and appurtenances necessary for a complete job.)	
5	Pump Modifications Including: Removal, rebuilding, and re-installation of re-built 100 hp motor, install new vertical turbine pump to match existing pump curve using water lubricated pump, entire new water lubricated column assembly, include +/- 70 vertical feet of column pipe, include new 416 SS line shaft, re-use existing pump discharge head, re-build stuffing box, sand-blasting and re-coating of existing discharge head with NSF61 approved epoxy, and demolish existing concrete block pump support base and re-construct in accordance with Georgia EPD Minimum Standards for Public Water Systems (Section 5.3.4.7e). (See Section 332114). (Pricing shall include all material, labor, equipment, and appurtenances necessary for a complete job.)	
6	Electrical & Control Improvements	
7	Performance Testing (includes pump capacity test and Rossum Sand Test)	
8	Disinfection, Sampling, & Laboratory Testing	
9	Building Modifications Necessary to Separate Chlorine & Fluoride Feed Rooms	
10	Chemical Feed Equipment	
11	Replace Doors of the Pump Room	
12	Concrete Pad and Emergency Shower/Eye Wash Plumbing	
13	New Roof and Interior Ceiling Tiles	
	WELL NO. 35 CONSTRUCTION SUB-TOTAL	

CONTRACTOR MUST OFFER PRICING ON ALL ALTERNATE ITEMS

ADDITIVE OR DEDUCTIVE ALTERNATE BID ITEMS		
ITEM NO	DESCRIPTION	UNIT PRICE
A1	Contractor offers the following unit price per linear foot of 10" Column Pipe to be added or deducted to achieve the necessary pump submergence based on pump test data.	

Bidder acknowledges that (1) each Bid Unit Price includes an amount considered by Bidder to be adequate to cover Contractor's overhead and profit for each separately identified item, and (2) estimated quantities are not guaranteed, and are solely for the purpose of comparison of Bids, and final payment for all unit price Bid items will be based on actual quantities, determined as provided in the Contract Documents.

Total of Lump Sum and Unit Price Bids = Total Bid Price (Not Including Alternates) $ _____

ARTICLE 6 – TIME OF COMPLETION

6.01 Bidder agrees that the Work will be substantially complete within _120_ calendar days after the date when the Contract Times commence to run as provided in Paragraph 4.01 of the General Conditions and will be completed and ready for final payment in accordance with Paragraph 15.06 of the General Conditions within _150_ calendar days after the date when the Contract Times commence to run.

ARTICLE 7 – ATTACHMENTS TO THIS BID

7.01 The following documents are submitted with and made a condition of this Bid:

A. Required Bid security;

B. List of Proposed Subcontractors;

C. List of Proposed Suppliers;

D. List of Project References;

E. Evidence of authority to do business in the state of the Project; or a written covenant to obtain such license within the time for acceptance of Bids;

F. Required Bidder Qualification Statement with supporting data;

G. E-Verify Affidavit; and

H. Non-Collusion Affidavit

ARTICLE 8 – DEFINED TERMS

8.01 The terms used in this Bid with initial capital letters have the meanings stated in the Instructions to Bidders, the General Conditions, and the Supplementary Conditions.

ARTICLE 9 – BID SUBMITTAL

BIDDER: *[Indicate correct name of bidding entity]*

_____

By:
[Signature] _____

[Printed name] _____
(If Bidder is a corporation, a limited liability company, a partnership, or a joint venture, attach evidence of authority to sign.)

Attest:
[Signature] _____

[Printed name] _____

Title: _____

Submittal Date: _____

Address for giving notices:

_____

_____

Telephone Number: _____

Fax Number: _____

Contact Name and e-mail address: _____

_____

Bidder's License No.: _____
(Where applicable)

SECTION 011000 - SUMMARY

PART 1 - GENERAL

1.1 SUMMARY

A. Section Includes:

1. Contract description.
2. Work by Owner or other Work at the Site.
3. Owner-furnished products.
4. Contractor's use of Site and premises.
5. Future work.
6. Work sequence.
7. Owner occupancy.
8. Permits.
9. Specification conventions.

1.2 CONTRACT DESCRIPTION

A. Work of the Project includes improvements to the City's Well No. 35. The Contractor will mobilize and perform a pump test to determine well capacity, static water level, and pumping water level. Contractor shall pull the pump and perform a preliminary video inspection of the well and pump and motor upgrades performed to meet required duty conditions. Existing pump base will be demolished and reconstructed to meet Georgia EPD minimum standards and discharge piping, valves, fittings, etc. will be replaced to match up to new pump discharge head elevation as detailed in the plans. The back doors of the pump room are to be removed and replaced. The roof of the building will be replaced and the interior ceiling tiles will be replaced. Electrical and control improvements will also be made as detailed in the plans. All materials shall be provided by Contractor except where noted to re-use or re-build existing items on plans. Once all improvements have been completed the Contractor will be responsible for performance testing, disinfection, sampling, and laboratory testing necessary to place the well back in service.

B. Perform Work of Contract under stipulated price Contract with Owner according to Conditions of Contract.

1.3 WORK BY OWNER OR OTHERS – NOT USED.

1.4 OWNER-FURNISHED PRODUCTS.

A. Refer to plan sheets for items specifically called out to be re-installed.

B. Attached to this Section are the Owner's Well Section sheets showing well casing sizing, depth and other relevant information. This data is provided by the Owner and Engineer is unable to verify its accuracy or completeness.

1.5 CONTRACTOR'S USE OF SITE AND PREMISES

A. Construction Operations: Limited to areas within existing right of ways.

B. Time Restrictions for Performing Work: Limited to the hours of 8:00 A.M. TO 6:00 P.M., local time Monday through Friday.

C. Utility Outages and Shutdown:

1. Coordinate and schedule utility outages with Owner.
2. Outages: Allowed only at previously agreed upon times. Water customers shall be notified 24 hours in advance prior to any outage. Water customers shall be notified when crews are on site and upon completion of work. Contractor shall advise customer to flush water through plumbing system once work is complete to prevent discolored water caused by disturbance of mineral deposits in piping systems during construction from discoloring laundry or otherwise damaging private property.

1.6 FUTURE WORK – NOT USED.

1.7 WORK SEQUENCE – NOT USED.

1.8 OWNER OCCUPANCY – NOT USED.

1.9 PERMITS

A. Furnish all necessary permits for construction of Work including the following:

1. NONE REQUIRED.

1.10 SPECIFICATION CONVENTIONS

A. These Specifications are written in imperative mood and streamlined form. This imperative language is directed to Contractor unless specifically noted otherwise. The words "shall be" are included by inference where a colon (:) is used within sentences or phrases.

PART 2 - PRODUCTS - Not Used

PART 3 - EXECUTION - Not Used

END OF SECTION 011000

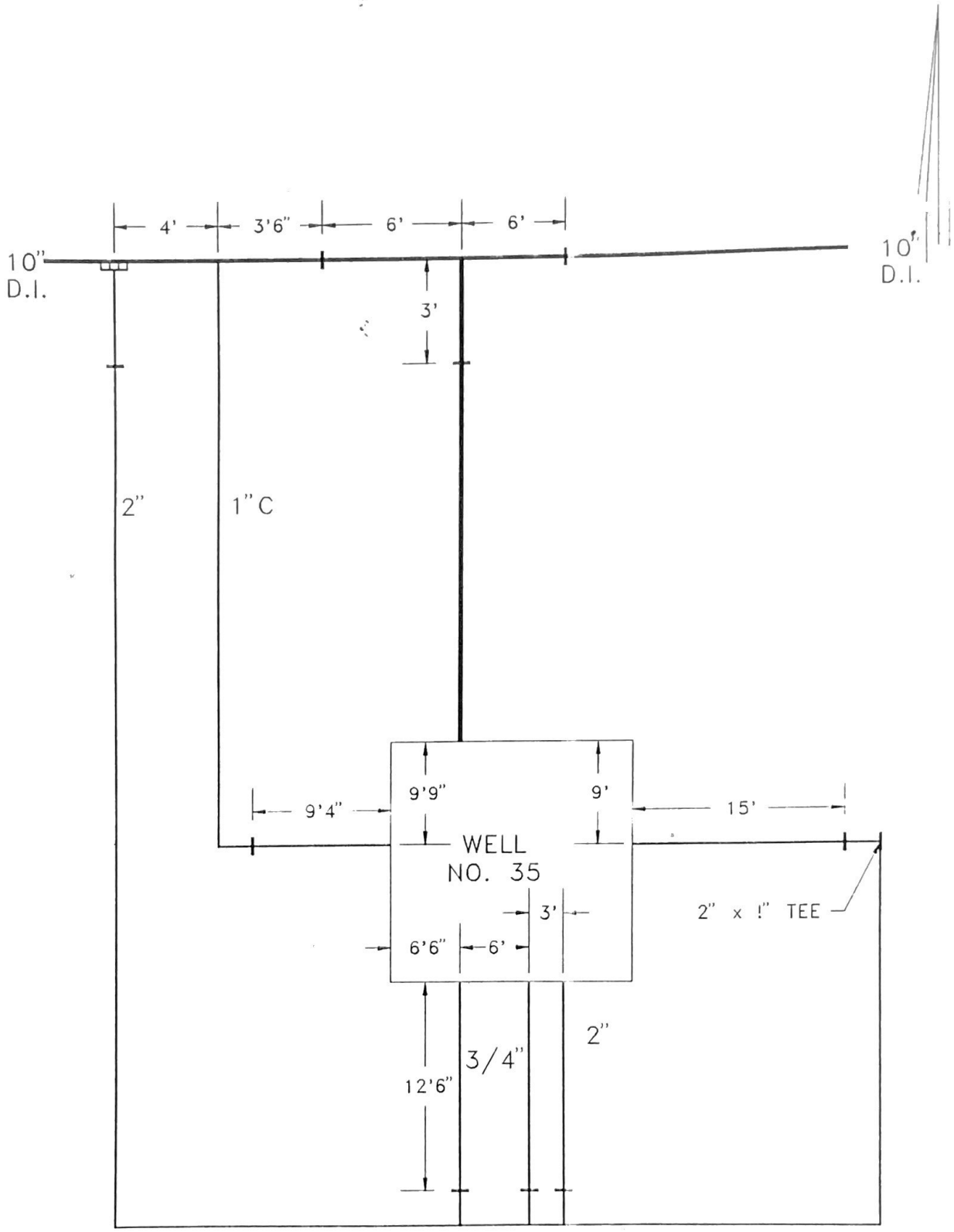

WATER, GAS & LIGHT COMM. ALBANY, GA.		VALVE RECORD
LOCATION WELL NO. 35		
DRAWN BY S. CHAMBERS	SCALE NONE	DRAWING NO.
SURVEY BY JCG	DATE 8-85	850 + 1470

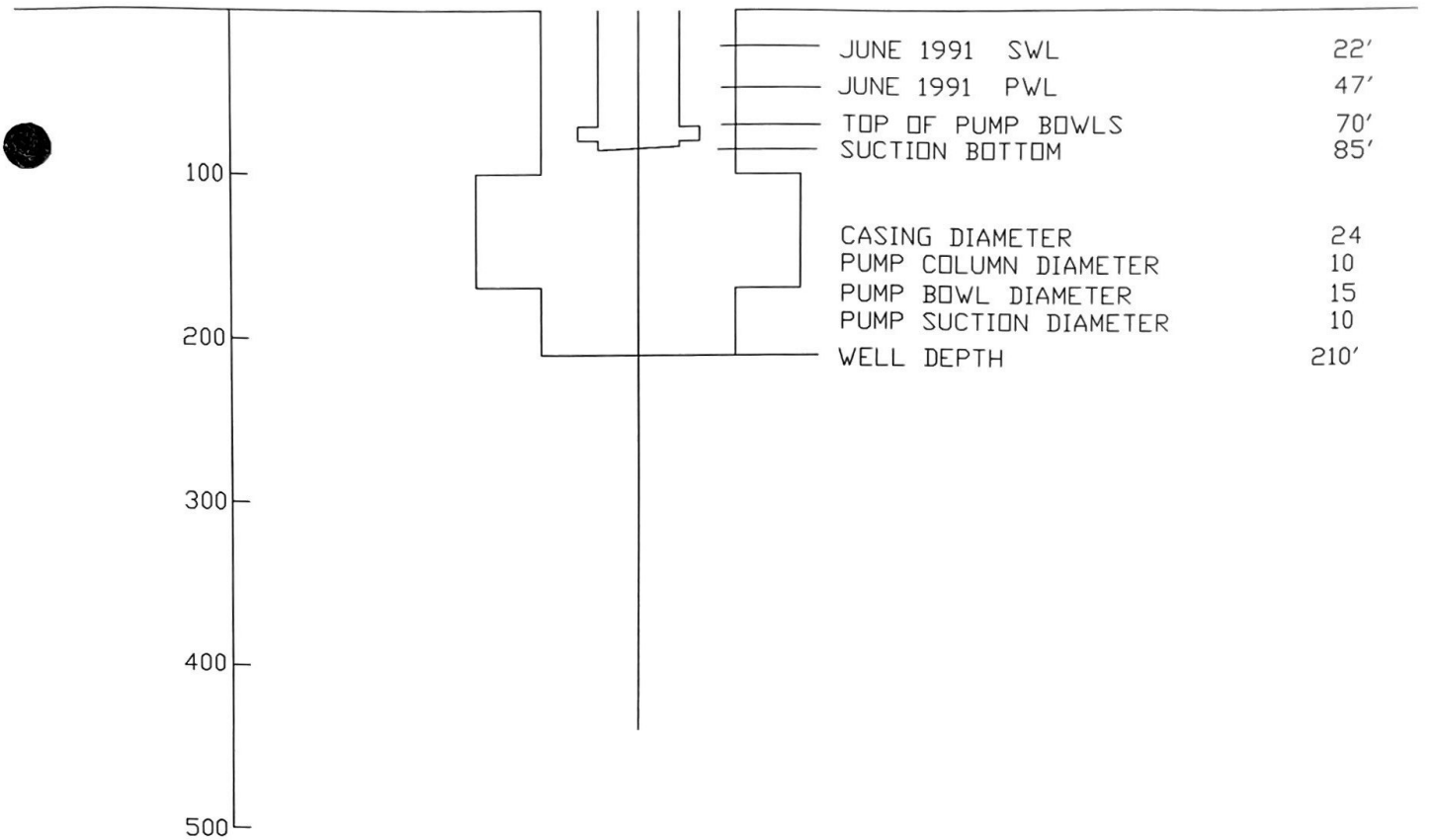

WELL35 SECTION SHEET
WG&L COMMISSION
2613 OAKRIDGE DR.

SECTION 012000 - PRICE AND PAYMENT PROCEDURES

PART 1 - GENERAL

1.1 SECTION INCLUDES

A. Cash allowances.

B. Contingency allowances.

C. Testing and inspection allowances.

D. Schedule of Values.

E. Application for Payment.

F. Change procedures.

G. Defect assessment.

H. Unit prices.

I. Alternates.

1.2 CASH ALLOWANCES

A. Costs Included in Cash Allowances: Cost of product to Contractor or Subcontractor, less applicable trade discounts; delivery to Site and applicable taxes unless stated otherwise in Allowance Schedule.

B. Costs Not Included in Cash Allowances but Included in Contract Price: Product handling at Site including unloading, uncrating, and storage; protection of products from elements and from damage; and labor for installation and finishing unless stated otherwise in Allowance Schedule.

C. Engineer Responsibilities:

1. Consult with Contractor for consideration and selection of products, suppliers, and installers.
2. Select products in consultation with Owner and transmit decision to Contractor.
3. Prepare Change Order.

D. Contractor Responsibilities:

1. Assist Engineer in selection of products, suppliers, and installers.
2. Obtain proposals from suppliers and installers and offer recommendations.
3. Upon notification of selection by Engineer, execute purchase agreement with designated supplier and installer.

4. Arrange for and process Shop Drawings, Product Data, and Samples. Arrange for delivery.
5. Promptly inspect products upon delivery for completeness, damage, and defects. Submit claims for transportation damage.

E. Differences in costs will be adjusted by Change Order.

F. Allowance Schedule – NOT USED.

1.3 CONTINGENCY ALLOWANCES – NOT USED.

1.4 TESTING AND INSPECTION ALLOWANCES – NOT USED.

1.5 SCHEDULE OF VALUES – NOT USED.

1.6 APPLICATION FOR PAYMENT

A. Submit four copies of each Application for Payment on EJCDC C-620 - Contractor's Application for Payment.

B. Content and Format: Use bid items listed in Bid Form for listing items in Application for Payment.

C. Submit updated four copies of construction schedule with each Application for Payment.

D. Payment Period: monthly.

E. Submit submittals with transmittal letter as specified in Section 013300 - Submittal Procedures.

F. Substantiating Data: When Engineer requires substantiating information, submit data justifying dollar amounts in question. Include the following with Application for Payment:
1. Partial release of liens from major Subcontractors and vendors.
2. Affidavits attesting to off-Site stored products.
3. Construction Progress Schedule, revised and current as specified in Section 013300 - Submittal Procedures.

1.7 CHANGE PROCEDURES

A. Submittals: Submit name of individual who is authorized to receive change documents and is responsible for informing others in Contractor's employ or Subcontractors of changes to the Work.

B. Carefully study and compare Contract Documents before proceeding with fabrication and installation of Work. Promptly advise Engineer of any error, inconsistency, omission, or apparent discrepancy.

C. Requests for Interpretation (RFI) and Clarifications: Allot time in construction scheduling for liaison with Engineer; establish procedures for handling queries and clarifications.

D. Engineer will advise of minor changes in the Work not involving adjustment to Contract Sum/Price or Contract Time by issuing supplemental instructions on EJCDC C-942 – Field Order.

E. Engineer may issue Proposal Request including a detailed description of proposed change with supplementary or revised Drawings and Specifications, and a change in Contract Time for executing the change. Contractor will prepare and submit estimate within 14 days.

F. Contractor may propose changes by submitting a request for change to Engineer, describing proposed change and its full effect on the Work. Include a statement describing reason for the change and the effect on Contract Price and Contract Time with full documentation.

G. Unit Price Change Order: For Contract unit prices and quantities, the Change Order will be executed on a fixed unit price basis. For unit costs or quantities of units of that which are not predetermined, execute Work under Work Directive Change. Changes in Contract Sum/Price or Contract Time will be computed as specified for Time and Material Change Order.

H. Work Directive Change: Engineer may issue directive, on EJCDC C-940 - Work Change Directive signed by Owner, instructing Contractor to proceed with change in the Work, for subsequent inclusion in a Change Order. Document will describe changes in the Work and designate method of determining any change in Contract Sum/Price or Contract Time. Promptly execute change.

I. Time and Material Change Order: Submit itemized account and supporting data after completion of change, within time limits indicated in Conditions of the Contract. Engineer will determine change allowable in Contract Sum/Price and Contract Time as provided in Contract Documents.

J. Maintain detailed records of Work done on time and material basis. Provide full information required for evaluation of proposed changes and to substantiate costs for changes in the Work.

K. Document each quotation for change in Project Cost or Time with sufficient data to allow evaluation of quotation.

L. Change Order Forms: EJCDC C-941 - Change Order.

M. Execution of Change Orders: Engineer will issue Change Orders for signatures of parties as provided in Conditions of the Contract.

N. Correlation of Contractor Submittals:

1. Promptly revise Schedule of Values and Application for Payment forms to record each authorized Change Order as separate line item and adjust Contract Sum/Price.

2. Promptly revise Progress Schedules to reflect change in Contract Time, revise sub schedules to adjust times for other items of Work affected by the change, and resubmit.
3. Promptly enter changes in Record Documents.

1.8 DEFECT ASSESSMENT

A. Replace the Work, or portions of the Work, not conforming to specified requirements.

B. If, in the opinion of Engineer, it is not practical to remove and replace the Work, Engineer will direct appropriate remedy or adjust payment.

C. Individual Specification Sections may modify these options or may identify specific formula or percentage sum/price reduction.

D. Authority of Engineer to assess defects and identify payment adjustments is final.

E. Nonpayment for Rejected Products: Payment will not be made for rejected products for any of the following reasons:

1. Products wasted or disposed of in a manner that is not acceptable.
2. Products determined as unacceptable before or after placement.
3. Products not completely unloaded from transporting vehicle.
4. Products placed beyond lines and levels of the required Work.
5. Products remaining on hand after completion of the Work.
6. Loading, hauling, and disposing of rejected products.

1.9 UNIT & LUMP SUM PRICES

A. Authority: Measurement methods are delineated in individual Specification Sections.

B. Measurement methods delineated in individual Specification Sections complement criteria of this Section. In event of conflict, requirements of this Section govern.

C. Take measurements and compute quantities. Engineer will verify measurements and quantities.

D. Unit Quantities: Quantities and measurements indicated on Bid Form are for Contract purposes only. Actual quantities provided shall determine payment.

1. When actual Work requires more or fewer quantities than those quantities indicated, provide required quantities at contracted unit prices.
2. When actual Work requires 10 percent or greater change in quantity than those quantities indicated, Owner or Contractor may claim a Contract Price adjustment.

E. Payment Includes: Full compensation for required labor, products, tools, equipment, plant and facilities, transportation, services and incidentals; erection, application, or installation of item of the Work; overhead and profit.

F. Final payment for Work governed by unit prices will be made on basis of actual measurements and quantities accepted by Engineer multiplied by unit sum/price for Work incorporated in or made necessary by the Work.

G. Measurement of Quantities:

1. Weigh Scales: Inspected, tested, and certified by applicable State weights and measures department within past year.
2. Platform Scales: Of sufficient size and capacity to accommodate conveying vehicle.
3. Metering Devices: Inspected, tested, and certified by applicable State department within past year.
4. Measurement by Weight: Concrete reinforcing steel, rolled or formed steel, or other metal shapes will be measured by handbook weights. Welded assemblies will be measured by handbook or scale weight.
5. Measurement by Volume: Measured by cubic dimension using mean length, width, and height or thickness.
6. Measurement by Area: Measured by square dimension using mean length and width or radius.
7. Linear Measurement: Measured by linear dimension, at item centerline or mean chord.
8. Stipulated Price Measurement: Items measured by weight, volume, area, or linear means or combination, as appropriate, as completed item or unit of the Work.

H. Unit & Lump Sum Price Schedule:

1. **Items: 1 Mobilization**.
   a. Measurement: Measurement for this item shall be on a lump sum basis.
   b. Payment: Payment for this item shall include mobilization of material, equipment, and personnel to the project site. Contractor shall also include cost of bonds and other indirect costs not directly attributable to other bid items.

2. **Items: 2 Test Pumping of Existing Well.**
   a. Measurement: Measurement for this item shall be on a lump sum basis.
   b. Payment: Payment for this item shall include test pumping to determine well yield, pumping water level, static water level, and well recovery period. Pumping shall be at the design flow rate and shall continue until water level stabilizes for 2 hours and for at least 8 hours total. Payment shall include all materials, equipment, & labor required to perform the required testing. Contractor shall be responsible to ensure water produced from pumping does not incur off-site impacts.

3. **Items: 3 Pull Existing Pump & Perform Video Inspection of Well.**
   a. Measurement: Measurement for this item shall be on a lump sum basis.
   b. Payment: Payment for this item shall include all costs to perform a video inspection of the entire depth of the well to determine the existing condition of the casing & screens prior to commencement of other work. Contractor shall provide DVD or other electronic format of the video to the Owner and Engineer for review. Payment shall include all materials, equipment, and labor required to video the well and provide copies of the videos.

4. **Items: 4 . Demolish/Remove Existing Discharge Piping and Valves and Replace with New Piping & Valves.**
   a. Measurement: Measurement for this item shall be on a lump sum basis.
   b. Payment: Payment for this item shall include all costs to remove the existing piping, valves, fittings, pre-lubrication system, etc. and replace with new piping, valves, fittings, etc. as shown on the Plans. Cost also includes removal and re-installation of existing well production meter. Payment shall include all materials, equipment, labor, and appurtenances required to provide a complete job.

5. **Items: 5. Pump Modifications.**
   a. Measurement: Measurement for this item shall be on a lump sum basis.
   b. Payment: Payment for this item shall include re-building and installation of re-built pump motor, installation of new pumping equipment to meet the duty point identified in the specifications. Payment shall include all new column pipe, pump bowls, internal rotating assembly, and new 416 stainless steel lineshaft, and airline water level measurement device. This item shall also include demolishing the existing concrete pump base and re-construction in accordance with Georgia EPD Minimum Standards for Public Water Systems (Section 5.3.4.7e). Payment for pump modifications shall include all materials, equipment, and labor necessary to install the specified pump in the existing well location.

6. **Items: 6. Electrical & Control Improvements.**
   a. Measurement: Measurement for this item shall be on a lump sum basis.
   b. Payment: Payment for this item shall include removal of existing wiring, conduits, starters, and related equipment and installation of new wiring, lighting, conduit, panels, and related equipment as necessary to operate the new well pump and motor as detailed in the Plans. Payment shall also include integration of new controls with existing SCADA equipment. Payment shall include all materials, equipment, incidentals, and labor necessary for removal of existing equipment and installation of new equipment. Payment shall include all work as shown on Electrical Plan Sheets.

7. **Items: 7. Performance Testing.**
   a. Measurement: Measurement for this item shall be on a lump sum basis.
   b. Payment: Payment for this item shall include all costs to perform testing of the well capacity, pump performance upon completion of installation, and Rossum Sand Test as required in the detailed specifications. Payment shall include all materials, equipment, and labor required to perform the required testing services.

8. **Items: 8. Disinfection, Sampling & Laboratory Testing.**
   a. Measurement: Measurement for this item shall be on a lump sum basis.
   b. Payment: Payment for this item shall include all costs to disinfect the well in accordance with AWWA C 654, latest edition and all Georgia EPD standards in order to place the well back into production. Work shall also include taking water samples and submission to laboratory for analysis for bacteriological testing. Payment shall include all materials, equipment, and labor required to

disinfect well and provide acceptable laboratory results prior to well being placed back into service.

9. **Item: 9. Building Modifications Necessary to Separate Chlorine & Fluoride Feed Rooms.**
   a. Measurement: Measurement for this item shall be on a lump sum basis.
   b. Payment: Payment for this item shall include erection of a new interior wall to separate chlorine and fluoride chemical feed into two separate rooms. Payment shall include installation of a new metal exterior door, required ventilation measures, electrical modifications including additional switches, lighting, etc. payment shall also include relocation of all existing chemical feed equipment as necessary. All work shall meet all applicable EPD Minimum Standards for Public Water Systems, latest edition.

10. **Item: 10. Chemical Feed Equipment.**
   a. Measurement: Measurement for this item shall be on a lump sum basis.
   b. Payment: Payment for this item shall include removal of existing tanks, pumps, scales, and related equipment and installation of new tanks, pumps, scales, service connections, and related equipment as necessary to operate the new chemical feed equipment as detailed in the Plans. Payment shall also include integration of new equipment with existing SCADA equipment as specified. Payment shall include all materials, equipment, incidentals, and labor necessary for removal of existing equipment and installation of new equipment. Payment shall include all work as shown on Plan Sheets.

11. **Item: 11. Replace Doors of the Pump Room.**
   a. Measurement: Measurement for this item shall be on a lump sum basis.
   b. Payment: Payment shall include installation of a new metal exterior door with louvers. All work shall meet all applicable EPD Minimum Standards for Public Water Systems, latest edition.

12. **Item: 12. Remove & Replace the Existing Concrete Pad and Plumb to Emergency Shower/Eye Wash.**
   a. Measurement: Measurement for this item shall be on a lump sum basis.
   b. Payment: Payment shall include the removal and replacement of the existing concrete pad with new concrete pad with an emergency shower/face wash as shown on the construction drawings. All work shall meet all applicable EPD Minimum Standards for Public Water Systems, latest edition.

13. **Item: 13. New Roof and Ceiling Tiles.**
   a. Measurement: Measurement for this item shall be on a lump sum basis.
   b. Payment: Payment shall include the removal and replacement of the existing roof with new roof with A-frame hatch as shown on the construction drawings. Payment also includes the removal and replacement of existing interior ceiling tiles with all-weather ceiling tiles as shown on construction drawings.

1.10 ALTERNATES

A. Alternates quoted on Bid Forms will be reviewed and accepted or rejected at Owner's option. Accepted Alternates will be identified in Owner-Contractor Agreement. The Owner-

Contractor Agreement may identify certain Alternates to remain an Owner option for a stipulated period of time.

B. Coordinate related Work and modify surrounding Work. Description for each Alternate is recognized to be abbreviated but requires that each change shall be complete for scope of Work affected.

1. Coordinate related requirements among Specification Sections as required.
2. Include as part of each Alternate: Miscellaneous devices, appurtenances, and similar items incidental to or necessary for complete installation.
3. Coordinate Alternate with adjacent Work and modify or adjust as necessary to ensure integration.

C. Schedule of Alternates:

1. Alternates No. A1 **Length of Column Pipe.**

a. Additive/Deductive alternate, to remain subject to Owner's acceptance through evaluation period of initial video inspection.
b. Measurement: Measurement for this item shall be on a unit price basis for each vertical foot of pipe installed.
c. Payment: Payment for this item shall be in the form of an adder or deduct for materials, equipment, and labor to adjust length of column pipe required for the installation of column piping if it is determined that either more or less column pipe than is specified is needed based on the pumping water level determined by pump test.

PART 2 - PRODUCTS - Not Used

PART 3 - EXECUTION - Not Used

END OF SECTION 012000

Copyright 2011 ARCOM

SECTION 012500 - SUBSTITUTION PROCEDURES

PART 1 - GENERAL

1.1 SECTION INCLUDES

A. Quality assurance.

B. Product options.

C. Product substitution procedures.

1.2 QUALITY ASSURANCE

A. Contract is based on products and standards established in Contract Documents without consideration of proposed substitutions.

B. Products specified define standard of quality, type, function, dimension, appearance, and performance required.

C. Substitution Proposals: Permitted for specified products except where specified otherwise. Do not substitute products unless substitution has been accepted and approved in writing by Owner.

1.3 PRODUCT OPTIONS

A. See Section 016000 - Product Requirements.

1.4 PRODUCT SUBSTITUTION PROCEDURES

A. Document C-200 - Instructions to Bidders specifies time restrictions for submitting requests for substitutions during Bidding period.

B. Substitution Procedures will be in accordance with Part 7.05 of the General Conditions (C-700) except in case of conflict with this Section. Procedures established in this Section shall take precedence in the case of conflict with the General Conditions.

C. Engineer will consider requests for substitutions only within 15 days after date established in Notice to Proceed.

D. Substitutions may be considered when a product becomes unavailable through no fault of Contractor.

E. Document each request with complete data, substantiating compliance of proposed substitution with Contract Documents, including:

1. Manufacturer's name and address, product, trade name, model, or catalog number, performance and test data, and reference standards.
2. Itemized point-by-point comparison of proposed substitution with specified product, listing variations in quality, performance, and other pertinent characteristics.
3. Reference to Article and Paragraph numbers in Specification Section.
4. Cost data comparing proposed substitution with specified product and amount of net change to Contract Sum.
5. Changes required in other Work.
6. Availability of maintenance service and source of replacement parts as applicable.
7. Certified test data to show compliance with performance characteristics specified.
8. Samples when applicable or requested.
9. Other information as necessary to assist Engineer's evaluation.

F. A request constitutes a representation that Bidder or Contractor:

1. Has investigated proposed product and determined that it meets or exceeds quality level of specified product.
2. Will provide same warranty for substitution as for specified product.
3. Will coordinate installation and make changes to other Work that may be required for the Work to be complete with no additional cost to Owner.
4. Waives claims for additional costs or time extension that may subsequently become apparent.
5. Will coordinate installation of the accepted substitute, making such changes as may be required for the Work to be complete in all respects.
6. Will reimburse Owner for review or redesign services associated with re-approval by authorities having jurisdiction.

G. Substitutions will not be considered when they are indicated or implied on Shop Drawing or Product Data submittals without separate written request or when acceptance will require revision to Contract Documents.

H. Substitution Submittal Procedure:
1. Submit three copies of Request for Substitution for consideration. Limit each request to one proposed substitution.
2. Submit Shop Drawings, Product Data, and certified test results attesting to proposed product equivalence. Burden of proof is on proposer.
3. Engineer will notify Contractor in writing of decision to accept or reject request.

1.5 INSTALLER SUBSTITUTION PROCEDURES

A. Document C-200 - Instructions to Bidders specifies time restrictions for submitting requests for substitutions during Bidding period.

B. Engineer will consider requests for substitutions only within 15 days after date established in Notice to Proceed.

C. Document each request with:

1. Installer's qualifications.
2. Installer's experience in work similar to that specified.
3. Other information as necessary to assist Engineer's evaluation.

D. Substitution Submittal Procedure:

1. Submit three copies of Request for Substitution for consideration. Limit each request to one proposed substitution.
2. Engineer will notify Contractor in writing of decision to accept or reject request.

PART 2 - PRODUCTS - Not Used

PART 3 - EXECUTION - Not Used

END OF SECTION 012500

Copyright 2011 ARCOM

SECTION 013000 - ADMINISTRATIVE REQUIREMENTS

PART 1 - GENERAL

1.1 SECTION INCLUDES

A. Coordination and Project conditions.

B. Preconstruction meeting.

C. Site mobilization meeting.

D. Progress meetings.

E. Pre-installation meetings.

F. Closeout meeting.

G. Alteration procedures.

1.2 COORDINATION AND PROJECT CONDITIONS

A. Coordinate scheduling, submittals, and Work of various Sections of Project Manual to ensure efficient and orderly sequence of installation of interdependent construction elements.

B. Coordination Meetings: In addition to other meetings specified in this Section, hold coordination meetings with personnel and Subcontractors to ensure coordination of Work.

C. Coordinate completion and clean-up of Work of separate Sections in preparation for Substantial Completion and for portions of Work designated for Owner's partial occupancy.

1.3 PRECONSTRUCTION MEETING

A. Engineer will schedule and preside over meeting after Notice of Award and execution of all required contract documents.

B. Attendance Required: Engineer, Owner, Resident Project Representative, appropriate governmental agency representatives, Construction Manager, major Subcontractors, and Contractor.

C. Minimum Agenda:
   1. Distribution of Contract Documents.
   2. Submission of list of Subcontractors, list of products, schedule of values, and Progress & Payment Schedule.
   3. Designation of personnel representing parties in Contract and Engineer.

4. Communication procedures.
5. Procedures and processing of requests for interpretations, field decisions, field orders, submittals, substitutions, Applications for Payments, proposal request, Change Orders, and Contract closeout procedures.
6. Scheduling.
7. Critical Work sequencing.

D. Engineer: Record minutes and distribute copies to participants within seven days after meeting, with a copy each to Engineer, Owner, and those affected by decisions made.

1.4 PROGRESS MEETINGS

A. Schedule and administer meetings throughout progress of the Work at maximum monthly intervals.

B. Engineer will make arrangements for meetings, prepare agenda with copies for participants, and preside over meetings.

C. Attendance Required: Job superintendent, major Subcontractors and suppliers, and Engineer, Owner, as appropriate to agenda topics for each meeting.

D. Minimum Agenda:

1. Review minutes of previous meetings.
2. Review of Work progress.
3. Field observations, problems, and decisions.
4. Identification of problems impeding planned progress.
5. Review of submittal schedule and status of submittals.
6. Review of off-Site fabrication and delivery schedules.
7. Maintenance of Progress Schedule.
8. Corrective measures to regain projected schedules.
9. Planned progress during succeeding work period.
10. Coordination of projected progress.
11. Maintenance of quality and work standards.
12. Effect of proposed changes on Progress Schedule and coordination.
13. Other business relating to Work.

E. Engineer: Record minutes and distribute copies to participants within seven days after meeting, with a copy each to Engineer, Owner, and those affected by decisions made.

1.5 PREINSTALLATION MEETINGS – NOT USED

1.6 CLOSEOUT MEETING

A. Schedule Project closeout meeting with sufficient time to prepare for requesting Substantial Completion. Preside over meeting and be responsible for minutes.

B. Attendance Required: Contractor Construction Manager, major Contractors, major Subcontractors, Engineer, Owner, and others appropriate to agenda.

C. Notify Engineer fourteen days in advance of meeting date.

D. Minimum Agenda:

1. Start-up of facilities and systems.
2. Operations and maintenance manuals.
3. Testing, adjusting, and balancing.
4. System demonstration and observation.
5. Operation and maintenance instructions for Owner's personnel.
6. Contractor's inspection of Work.
7. Contractor's preparation of an initial "punch list."
8. Procedure to request Engineer inspection to determine date of Substantial Completion.
9. Completion time for correcting deficiencies.
10. Inspections by authorities having jurisdiction.
11. Certificate of Occupancy and transfer of insurance responsibilities.
12. Partial release of retainage.
13. Final cleaning.
14. Preparation for final inspection.
15. Closeout Submittals:

    a. Project record documents.
    b. Operating and maintenance documents.
    c. Operating and maintenance materials.
    d. Affidavits.

16. Final Application for Payment.
17. Contractor's demobilization of Site.
18. Maintenance.

E. Record minutes and distribute copies to participants within seven days after meeting, with a copy each to Engineer, Owner, and those affected by decisions made.

PART 2 - PRODUCTS - Not Used

PART 3 - EXECUTION – Not Used

END OF SECTION 013000

Copyright 2011 ARCOM

SECTION 013300 - SUBMITTAL PROCEDURES

PART 1 - GENERAL

1.1 SECTION INCLUDES

A. Definitions.

B. Submittal procedures.

C. Construction progress schedules.

D. Proposed product list.

E. Product data.

F. Use of electronic CAD files of Project Drawings.

G. Shop Drawings.

H. Samples.

I. Other submittals.

J. Design data.

K. Test reports.

L. Certificates.

M. Manufacturer's instructions.

N. Manufacturer's field reports.

O. Erection Drawings.

P. Construction photographs.

Q. Contractor review.

R. Engineer review.

1.2 DEFINITIONS

A. Action Submittals: Written and graphic information and physical samples that require Engineer's responsive action.

B. Informational Submittals: Written and graphic information and physical Samples that do not require Engineer's responsive action. Submittals may be rejected for not complying with requirements.

1.3 SUBMITTAL PROCEDURES

A. Transmit each submittal with Engineer-accepted form.

B. Sequentially number transmittal forms. Mark revised submittals with original number and sequential alphabetic suffix.

C. Identify: Project, Contractor, Subcontractor and supplier, pertinent Drawing and detail number, and Specification Section number appropriate to submittal.

D. Apply Contractor's stamp, signed or initialed, certifying that review, approval, verification of products required, field dimensions, adjacent construction Work, and coordination of information is according to requirements of the Work and Contract Documents.

E. Schedule submittals to expedite Project and deliver to Engineer at business address. Coordinate submission of related items.

F. For each submittal for review, allow 15 days excluding delivery time to and from Contractor.

G. Identify variations in Contract Documents and product or system limitations that may be detrimental to successful performance of completed Work.

H. Allow space on submittals for Contractor and Engineer review stamps.

I. When revised for resubmission, identify changes made since previous submission.

J. Distribute copies of reviewed submittals as appropriate. Instruct parties to promptly report inability to comply with requirements.

K. Submittals not requested will not be recognized nor processed.

L. Incomplete Submittals: Engineer will not review. Complete submittals for each item are required. Delays resulting from incomplete submittals are not the responsibility of Engineer.

1.4 CONSTRUCTION PROGRESS SCHEDULES

A. Comply with Section 013216 - Construction Progress Schedule

1.5 PROPOSED PRODUCT LIST

A. Within 15 days after date of Notice to Proceed, submit list of major products proposed for use, with name of manufacturer, trade name, and model number of each product.

B. For products specified only by reference standards, indicate manufacturer, trade name, model or catalog designation, and reference standards.

1.6 PRODUCT DATA

A. Product Data: Action Submittal: Submit to Engineer for review for assessing conformance with information given and design concept expressed in Contract Documents.

B. Submit number of copies Contractor requires, plus two copies Engineer will retain.

C. Mark each copy to identify applicable products, models, options, and other data. Supplement manufacturers' standard data to provide information specific to this Project.

D. Indicate product utility and electrical characteristics, utility connection requirements, and location of utility outlets for service for functional equipment and appliances.

E. After review, produce copies and distribute according to "Submittal Procedures" Article and for record documents described in Section 017000 - Execution and Closeout Requirements.

1.7 ELECTRONIC CAD FILES OF PROJECT DRAWINGS

A. Electronic CAD Files of Project Drawings: May only be used to expedite production of Shop Drawings for the Project. Use for other Projects or purposes is not allowed.

B. Electronic CAD Files of Project Drawings: Distributed only under the following conditions:

1. Use of files is solely at receiver's risk. Engineer does not warrant accuracy of files. Receiving files in electronic form does not relieve receiver of responsibilities for measurements, dimensions, and quantities set forth in Contract Documents. In the event of ambiguity, discrepancy, or conflict between information on electronic media and that in Contract Documents, notify Engineer of discrepancy and use information in hard-copy Drawings and Specifications.
2. CAD files do not necessarily represent the latest Contract Documents, existing conditions, and as-built conditions. Receiver is responsible for determining and complying with these conditions and for incorporating addenda and modifications.
3. User is responsible for removing information not normally provided on Shop Drawings and removing references to Contract Documents. Shop Drawings submitted with information associated with other trades or with references to Contract Documents will not be reviewed and will be immediately returned.
4. Receiver shall not hold Engineer responsible for data or file clean-up required to make files usable, nor for error or malfunction in translation, interpretation, or use of this electronic information.
5. Receiver shall understand that even though Engineer has computer virus scanning software to detect presence of computer viruses, there is no guarantee that computer viruses are not present in files or in electronic media.
6. Receiver shall not hold Engineer responsible for such viruses or their consequences, and shall hold Engineer harmless against costs, losses, or damage caused by presence of computer virus in files or media.

1.8 SHOP DRAWINGS

A. Shop Drawings: Action Submittal: Submit to Engineer for assessing conformance with information given and design concept expressed in Contract Documents.

B. Indicate special utility and electrical characteristics, utility connection requirements, and location of utility outlets for service for functional equipment and appliances.

C. When required by individual Specification Sections, provide Shop Drawings signed and sealed by a professional Engineer responsible for designing components shown on Shop Drawings.

1. Include signed and sealed calculations to support design.
2. Submit Shop Drawings and calculations in form suitable for submission to and approval by authorities having jurisdiction.
3. Make revisions and provide additional information when required by authorities having jurisdiction.

D. Submit number of opaque reproductions Contractor requires, plus three copies Engineer will retain.

E. After review, produce copies and distribute according to "Submittal Procedures" Article and for record documents described in Section 017000 - Execution and Closeout Requirements.

1.9 SAMPLES

A. Samples: Action Submittal: Submit to Engineer for assessing conformance with information given and design concept expressed in Contract Documents.

B. Samples for Selection as Specified in Product Sections:

1. Submit to Engineer for aesthetic, color, and finish selection.
2. Submit Samples of finishes, textures, and patterns for Engineer selection.

C. Submit Samples to illustrate functional and aesthetic characteristics of products, with integral parts and attachment devices. Coordinate Sample submittals for interfacing work.

D. Include identification on each Sample, with full Project information.

E. Submit number of Samples specified in individual Specification Sections; Engineer will retain one Sample.

F. Reviewed Samples that may be used in the Work are indicated in individual Specification Sections.

G. Samples will not be used for testing purposes unless specifically stated in Specification Section.

H. After review, produce copies and distribute according to "Submittal Procedures" Article and for record documents described in Section 017000 - Execution and Closeout Requirements.

1.10 OTHER SUBMITTALS

A. Closeout Submittals: Comply with Section 017000 - Execution and Closeout Requirements.

B. Informational Submittal: Submit data for Engineer's knowledge as Contract administrator or for Owner.

C. Submit information for assessing conformance with information given and design concept expressed in Contract Documents.

1.11 TEST REPORTS

A. Informational Submittal: Submit reports for Engineer's knowledge as Contract administrator or for Owner.

B. Submit test reports for information for assessing conformance with information given and design concept expressed in Contract Documents.

1.12 CERTIFICATES

A. Informational Submittal: Submit certification by manufacturer, installation/application Subcontractor, or Contractor to Engineer, in quantities specified for Product Data.

B. Indicate material or product conforms to or exceeds specified requirements. Submit supporting reference data, affidavits, and certifications as appropriate.

C. Certificates may be recent or previous test results on material or product but must be acceptable to Engineer.

1.13 MANUFACTURER'S INSTRUCTIONS

A. Informational Submittal: Submit manufacturer's installation instructions for Engineer's knowledge as Contract administrator or for Owner.

B. Submit printed instructions for delivery, storage, assembly, installation, startup, adjusting, and finishing, to Engineer in quantities specified for Product Data.

C. Indicate special procedures, perimeter conditions requiring special attention, and special environmental criteria required for application or installation.

1.14 MANUFACTURER'S FIELD REPORTS

A. Informational Submittal: Submit reports for Engineer's knowledge as Contract administrator or for Owner.

B. Submit report in duplicate within 5 days of observation to Engineer for information.

C. Submit reports for information for assessing conformance with information given and design concept expressed in Contract Documents.

1.15 ERECTION DRAWINGS

A. Informational Submittal: Submit Drawings for Engineer's knowledge as Contract administrator or for Owner.

B. Submit Drawings for information assessing conformance with information given and design concept expressed in Contract Documents.

C. Data indicating inappropriate or unacceptable Work may be subject to action by Engineer or Owner.

1.16 CONTRACTOR REVIEW

A. Review for compliance with Contract Documents and approve submittals before transmitting to Engineer.

B. Contractor: Responsible for:

1. Determination and verification of materials including manufacturer's catalog numbers.
2. Determination and verification of field measurements and field construction criteria.
3. Checking and coordinating information in submittal with requirements of Work and of Contract Documents.
4. Determination of accuracy and completeness of dimensions and quantities.
5. Confirmation and coordination of dimensions and field conditions at Site.
6. Construction means, techniques, sequences, and procedures.
7. Safety precautions.
8. Coordination and performance of Work of all trades.

C. Stamp, sign or initial, and date each submittal to certify compliance with requirements of Contract Documents.

D. Do not fabricate products or begin Work for which submittals are required until approved submittals have been received from Engineer.

1.17 ENGINEER REVIEW

A. Do not make "mass submittals" to Engineer. "Mass submittals" are defined as six or more submittals or items in one day or 15 or more submittals or items in one week. If "mass submittals" are received, Engineer's review time stated above will be extended as necessary to perform proper review. Engineer will review "mass submittals" based on priority determined by Engineer after consultation with Owner and Contractor.

B. Informational submittals and other similar data are for Engineer's information, do not require Engineer's responsive action, and will not be reviewed or returned with comment.

C. Submittals made by Contractor that are not required by Contract Documents may be returned without action.

D. Submittal approval does not authorize changes to Contract requirements unless accompanied by Change Order, Field Order, or Work Change Directive.

PART 2 - PRODUCTS - Not Used

PART 3 - EXECUTION - Not Used

END OF SECTION 013300

Copyright 2011 ARCOM

SECTION 016000 - PRODUCT REQUIREMENTS

PART 1 - GENERAL

1.1 SECTION INCLUDES

A. Products.

B. Product delivery requirements.

C. Product storage and handling requirements.

D. Product options.

E. Equipment electrical characteristics and components.

1.2 PRODUCTS

A. At minimum, comply with specified requirements and reference standards.

B. Specified products define standard of quality, type, function, dimension, appearance, and performance required.

C. Furnish products of qualified manufacturers that are suitable for intended use. Furnish products of each type by single manufacturer unless specified otherwise. Confirm that manufacturer's production capacity can provide sufficient product, on time, to meet Project requirements.

D. Do not use materials and equipment removed from existing premises except as specifically permitted by Contract Documents.

E. Furnish interchangeable components from same manufacturer for components being replaced.

1.3 PRODUCT DELIVERY REQUIREMENTS

A. Transport and handle products according to manufacturer's instructions.

B. Promptly inspect shipments to ensure products comply with requirements, quantities are correct, and products are undamaged.

C. Provide equipment and personnel to handle products; use methods to prevent soiling, disfigurement, or damage.

1.4 PRODUCT STORAGE AND HANDLING REQUIREMENTS

A. Store and protect products according to manufacturer's instructions.

B. Store products with seals and labels intact and legible.

C. Store sensitive products in weathertight, climate-controlled enclosures in an environment suitable to product.

D. For exterior storage of fabricated products, place products on sloped supports aboveground.

E. Provide off-Site storage and protection when Site does not permit on-Site storage or protection.

F. Cover products subject to deterioration with impervious sheet covering. Provide ventilation to prevent condensation and degradation of products.

G. Store loose granular materials on solid flat surfaces in well-drained area. Prevent mixing with foreign matter.

H. Provide equipment and personnel to store products; use methods to prevent soiling, disfigurement, or damage.

I. Arrange storage of products to permit access for inspection. Periodically inspect to verify products are undamaged and are maintained in acceptable condition.

1.5 PRODUCT OPTIONS

A. Products Specified by Reference Standards or by Description Only: Products complying with specified reference standards or description.

B. Products Specified by Naming One or More Manufacturers with Provision for Substitutions: Submit Request for Substitution for any manufacturer not named, according to Section 012500 - Substitution Procedures.

PART 2 - PRODUCTS –Not Used

PART 3 - EXECUTION - Not Used

END OF SECTION 016000

Copyright 2011 ARCOM

SECTION 017000 - EXECUTION AND CLOSEOUT REQUIREMENTS

PART 1 - GENERAL

1.1 SECTION INCLUDES

A. Field engineering.

B. Closeout procedures.

C. Starting of systems.

D. Demonstration and instructions.

E. Testing, adjusting, and balancing.

F. Project record documents.

G. Operation and maintenance data.

H. Manual for materials and finishes.

I. Manual for equipment and systems.

J. Spare parts and maintenance products.

K. Product warranties and product bonds.

L. Maintenance service.

M. Examination.

N. Preparation.

O. Execution.

P. Cutting and patching.

Q. Protecting installed construction.

R. Final cleaning.

1.2 FIELD ENGINEERING

A. Employ land surveyor registered in State of Georgia and acceptable to Engineer and Owner.

B. Locate and protect survey control and reference points. Promptly notify Engineer of discrepancies discovered.

1.3 CLOSEOUT PROCEDURES

A. Prerequisites to Substantial Completion: Complete following items before requesting Certification of Substantial Completion, either for entire Work or for portions of Work:

1. Submit maintenance manuals, Project record documents, digital images of construction photographs, and other similar final record data in compliance with this Section.
2. Complete facility startup, testing, adjusting, balancing of systems and equipment, demonstrations, and instructions to Owner's operating and maintenance personnel as specified in compliance with this Section.
3. Conduct inspection to establish basis for request that Work is substantially complete. Create comprehensive list (initial punch list) indicating items to be completed or corrected, value of incomplete or nonconforming Work, reason for being incomplete, and date of anticipated completion for each item. Include copy of list with request for Certificate of Substantial Completion.
4. Obtain and submit releases enabling Owner's full, unrestricted use of Project and access to services and utilities. Include certificate of occupancy, operating certificates, and similar releases from authorities having jurisdiction and utility companies.
5. Deliver tools, spare parts, extra stocks of material, and similar physical items to Owner.
6. Perform final cleaning according to this Section.

B. Substantial Completion Inspection:

1. When Contractor considers Work to be substantially complete, submit to Engineer:

   a. Written certificate that Work, or designated portion, is substantially complete.
   b. List of items to be completed or corrected (initial punch list).

2. Within fourteen days after receipt of request for Substantial Completion, Engineer will make inspection to determine whether Work or designated portion is substantially complete.
3. Should Engineer determine that Work is not substantially complete:

   a. Engineer will promptly notify Contractor in writing, stating reasons for its opinion.
   b. Contractor shall remedy deficiencies in Work and send second written request for Substantial Completion to Engineer.
   c. Engineer will re-inspect Work.
   d. Redo and Inspection of Deficient Work: Repeated until Work passes Engineer's inspection.

4. When Engineer finds that Work is substantially complete, Engineer will:

   a. Prepare Certificate of Substantial Completion on EJCDC C-625 - Certificate of Substantial Completion, accompanied by Contractor's list of items to be

completed or corrected as verified and amended by Engineer and Owner (final punch list).

b. Submit Certificate to Owner and Contractor for their written acceptance of responsibilities assigned to them in Certificate.

5. After Work is substantially complete, Contractor shall:

a. Allow Owner occupancy of Project under provisions stated in Certificate of Substantial Completion.
b. Complete Work listed for completion or correction within time period stipulated.

C. Prerequisites for Final Completion: Complete following items before requesting final acceptance and final payment.

1. When Contractor considers Work to be complete, submit written certification that:

a. Contract Documents have been reviewed.
b. Work has been examined for compliance with Contract Documents.
c. Work has been completed according to Contract Documents.
d. Work is completed and ready for final inspection.

2. Submittals: Submit following:

a. Final punch list indicating all items have been completed or corrected.
b. Final payment request with final releases and supporting documentation not previously submitted and accepted. Include certificates of insurance for products and completed operations where required.
c. Specified warranties, workmanship/maintenance bonds, maintenance agreements, and other similar documents.
d. Accounting statement for final changes to Contract Sum.
e. Contractor's affidavit of payment of debts and claims.
f. Contractor affidavit of release of liens.

3. Perform final cleaning for Contractor-soiled areas according to this Section.

D. Final Completion Inspection:

1. Within fourteen days after receipt of request for final inspection, Engineer will make inspection to determine whether Work or designated portion is complete.
2. Should Engineer consider Work to be incomplete or defective:

a. Engineer will promptly notify Contractor in writing, listing incomplete or defective Work.
b. Contractor shall remedy stated deficiencies and send second written request to Engineer that Work is complete.
c. Engineer will re-inspect Work.
d. Redo and Inspection of Deficient Work: Repeated until Work passes Engineer's inspection.

1.4 STARTING OF SYSTEMS

A. Coordinate schedule for startup of various equipment and systems.

B. Notify Engineer fourteen days prior to startup of each item.

C. Execute startup under supervision of manufacturer's representative or Contractors' personnel according to manufacturer's instructions.

D. When specified in individual Specification Sections, require manufacturer to provide authorized representative who will be present at Site to inspect, check, and approve equipment or system installation prior to startup and will supervise placing equipment or system in operation.

E. Submit a written report according to Section 013300 - Submittal Procedures that equipment or system has been properly installed and is functioning correctly.

1.5 DEMONSTRATION AND INSTRUCTIONS

A. Demonstrate operation and maintenance of products to Owner's personnel prior to date of Substantial Completion.

B. Demonstrate Project equipment and instructed by manufacturer's representative who is knowledgeable about the Project.

C. For equipment or systems requiring seasonal operation, perform demonstration for other season within six months.

D. Use operation and maintenance manuals as basis for instruction. Review contents of manual with Owner's personnel in detail to explain all aspects of operation and maintenance.

E. Demonstrate startup, operation, control, adjustment, troubleshooting, servicing, maintenance, and shutdown of each item of equipment at agreed time, at equipment location.

F. Prepare and insert additional data in operations and maintenance manuals when need for additional data becomes apparent during instruction.

G. Required instruction time for each item of equipment and system is specified in individual Specification Sections.

1.6 PROJECT RECORD DOCUMENTS

A. Maintain on Site one set of the following record documents; record actual revisions to the Work:
   1. Specifications.
   2. Addenda.
   3. Change Orders and other modifications to the Contract.
   4. Reviewed Shop Drawings, product data, and Samples.

5. Manufacturer's instruction for assembly, installation, and adjusting.

B. Ensure entries are complete and accurate, enabling future reference by Owner.

C. Store record documents separate from documents used for construction.

D. Record information concurrent with construction progress, not less than weekly.

E. Specifications: Legibly mark and record, at each product Section, description of actual products installed, including the following:

1. Manufacturer's name and product model and number.
2. Product substitutions or alternates used.
3. Changes made by Addenda and modifications.

F. Submit marked-up paper copy documents to Engineer with claim for final Application for Payment.

1.7 OPERATION AND MAINTENANCE DATA

A. Submit in PDF composite electronic indexed file.

B. Submit data bound in 8-1/2 x 11-inch text pages, three D side ring binders with durable plastic covers.

C. Prepare binder cover with printed title "OPERATION AND MAINTENANCE INSTRUCTIONS," title of Project, and subject matter of binder when multiple binders are required.

D. Internally subdivide binder contents with permanent page dividers, logically organized as described below; with tab titling clearly printed under reinforced laminated plastic tabs.

E. Drawings: Provide with reinforced punched binder tab. Bind in with text; fold larger drawings to size of text pages.

F. Contents: Prepare table of contents for each volume, with each product or system description identified, typed on white paper, in three parts as follows:

1. Part 1: Directory, listing names, addresses, and telephone numbers of Engineer, Contractor, Subcontractors, and major equipment suppliers.
2. Part 2: Operation and maintenance instructions, arranged by process flow and subdivided by Specification Section. For each category, identify names, addresses, and telephone numbers of Subcontractors and suppliers. Include the following:

    a. Significant design criteria.
    b. List of equipment.
    c. Parts list for each component.
    d. Operating instructions.
    e. Maintenance instructions for equipment and systems.
    f. Maintenance instructions for finishes, including recommended cleaning methods and materials, and special precautions identifying detrimental agents.

g. Safety precautions to be taken when operating and maintaining or working near equipment.

3. Part 3: Project documents and certificates, including the following:

a. Shop Drawings and product data.
b. Certificates.
c. Originals of warranties and bonds.

1.8 MANUAL FOR MATERIALS AND FINISHES

A. Submit two copies of preliminary draft or proposed formats and outlines of contents before start of Work. Engineer will review draft and return one copy with comments.

B. For equipment or component parts of equipment put into service during construction and operated by Owner, submit documents within ten days after acceptance.

C. Submit one copy of completed volumes 15 days prior to final inspection. Draft copy be reviewed and returned after final inspection, with Engineer comments. Revise content of document sets as required prior to final submission.

D. Submit two sets of revised final volumes within ten days after final inspection.

E. Submit in PDF composite electronic indexed file of final manual within ten days after final inspection.

F. Building Products, Applied Materials, and Finishes: Include product data, with catalog number, size, composition, and color and texture designations. Include information for re-ordering custom-manufactured products.

G. Instructions for Care and Maintenance: Include manufacturer's recommendations for cleaning agents and methods, precautions against detrimental agents and methods, and recommended schedule for cleaning and maintenance.

H. Moisture Protection and Weather Exposed Products: Include product data listing applicable reference standards, chemical composition, and details of installation. Include recommendations for inspections, maintenance, and repair.

I. Additional Requirements: As specified in individual product Specification Sections.

J. Include listing in table of contents for design data, with tabbed fly sheet and space for insertion of data.

1.9 MANUAL FOR EQUIPMENT AND SYSTEMS

A. Submit two copies of preliminary draft or proposed formats and outlines of contents before start of Work. Engineer will review draft and return one copy with comments.

B. For equipment, or component parts of equipment put into service during construction and operated by Owner, submit documents within ten days after acceptance.

C. Submit one copy of completed volumes 15 days prior to final inspection. Draft copy will be reviewed and returned after final inspection, with Engineer comments. Revise content of document sets as required prior to final submission.

D. Submit two sets of revised final volumes within ten days after final inspection.

E. Submit in PDF composite electronic indexed file of final manual within ten days after final inspection.

F. Each Item of Equipment and Each System: Include description of unit or system and component parts. Identify function, normal operating characteristics, and limiting conditions. Include performance curves, with engineering data and tests, and complete nomenclature and model number of replaceable parts.

G. Maintenance Requirements: Include routine procedures and guide for preventative maintenance and troubleshooting; disassembly, repair, and reassembly instructions; and alignment, adjusting, balancing, and checking instructions.

H. Include manufacturer's printed operation and maintenance instructions.

I. Include sequence of operation by controls manufacturer.

J. Include original manufacturer's parts list, illustrations, assembly drawings, and diagrams required for maintenance.

K. Additional Requirements: As specified in individual product Specification Sections.

L. Include listing in table of contents for design data with tabbed dividers and space for insertion of data.

1.10 SPARE PARTS AND MAINTENANCE PRODUCTS

A. Furnish spare parts, maintenance, and extra products in quantities specified in individual Specification Sections.

B. Deliver to Project Site and place in location as directed by Owner; obtain receipt prior to final payment.

1.11 PRODUCT WARRANTIES AND PRODUCT BONDS

A. Obtain warranties and bonds executed in duplicate by responsible Subcontractors, suppliers, and manufacturers within ten days after completion of applicable item of Work.

B. Execute and assemble transferable warranty documents and bonds from Subcontractors, suppliers, and manufacturers.

C. Verify documents are in proper form, contain full information, and are notarized.

D. Co-execute submittals when required.

E. Include table of contents and assemble in three D side ring binder with durable plastic cover.

F. Submit prior to final Application for Payment.

G. Time of Submittals:

1. For equipment or component parts of equipment put into service during construction with Owner's permission, submit documents within ten days after acceptance.
2. Make other submittals within ten days after date of Substantial Completion, prior to final Application for Payment.
3. For items of Work for which acceptance is delayed beyond Substantial Completion, submit within ten days after acceptance, listing date of acceptance as beginning of warranty or bond period.

PART 2 - PRODUCTS - Not Used

PART 3 - EXECUTION

3.1 FINAL CLEANING

A. Remove waste and surplus materials, rubbish, and construction facilities from Site.

END OF SECTION 017000

Copyright 2011 ARCOM

SECTION 160900- REPAIR OF LOW VOLTAGE INDUCTION MOTORS

PART 1 - GENERAL

1.01 SCOPE

The Repair Specifications list the suggested minimum requirements for the repair and overhaul of low-voltage random-wound three-phase AC squirrel cage induction motors, which are sent for repair.

1.02 INTENT

The intent of these Model Repair Specifications is to achieve a consistent, high quality diagnosis, repair and/or overhaul of a motor, and to return it to good operating condition with a minimum of delay and cost. Not all repair situations can be covered in these Model Repair Specifications. In the absence of specific instructions, the requirement shall be to restore the motor to as-manufactured condition.

1.03 REFERENCE DOCUMENTS

The references to be used in conjunction with these Model Repair Specifications are the latest editions of the following:

A. UL674 Electric Motors and Generators For Use In Hazardous Locations

B. EASA AR100-1998 Recommended Practice For The Repair of Rotating Electrical Apparatus

C. IEEE Std. 43, Recommended Practice for Testing Insulation Resistance of Rotating Machiner

D. IEEE Std. 112, IEEE Standard Test Procedure for Polyphase Induction Motors and Generators

E. ISO Std 1940-1, Mechanical Vibration—Balance Quality Requirements of Rigid Rotors

F. NEMA Std. MG-1, Motors and Generators

G. ABMA ANSI/ABMA Std. 7, Shaft and Housing Fits for Metric Radial Ball and Roller Bearings

1.04 HAZARDOUS LOCATIONS

Motors intended for use in hazardous locations will have a nameplate to that effect. The repair work shall be done in a facility which has been certified by the Underwriters Laboratories to meet the requirements of UL674 Qualification of Facilities Engaged in the Repair of Electric Motors and Generators for use in Hazardous Locations. If the explosion-proof characteristics of the motor are not to be maintained, then the nameplate shall be altered to reflect this, and the motor will no longer be considered suitable for use in hazardous areas.

1.05 GENERAL

A. Unavoidable Degradation

During repair, if any damage is found which cannot be fully repaired, the purchaser's approval is required before proceeding. Likewise, if any repair is indicated which may result in a permanent degradation of efficiency or other performance parameters, the purchaser's approval is required before proceeding.

B. Operating Environment

If this motor operates in severe environmental conditions, it will be indicated on the accompanying motor repair form. No repair methods or materials may be used which make the motor more vulnerable to these conditions than it was as originally built.

C. If Powered by an Inverter

If "Powered by ASD" is checked on the accompanying Motor Repair Form, this motor is powered by a pulse-width-modulated inverter. The windings shall be sufficiently insulated and supported to withstand this type of power supply. Magnet wire must be of a design intended for inverter duty. The wire manufacturer and specification shall be reported to the customer.

D. Subcontracted Work

If any work is to be subcontracted (e.g., rotor balancing) or any subassemblies (e.g., formed coils) are to be provided by outside sources, the purchaser shall be advised of the providers of these parts/services as soon as it is known they are required.

PART 2 - PRODUCTS

2.01 DOCUMENTATION

A. Repair forms

The motor will be accompanied by a Motor Repair Form from the purchaser which will list the perceived problems, the operating environment, the urgency of the repair, past problems where applicable, the required repair, cost constraints, missing parts and the person within the purchaser's organization to be contacted about the repair. This form shall be used as a guide for the repair.

During repair, actions and findings will be recorded on a Repairer's Tracking Form. It shall contain records of all the work done, problems noted, checks and measurements taken during the work, repairs carried out and the final tests conducted prior to shipping. Requirements for the work, checks and tests are listed in following sections. A sample of a Repairer's Tracking Form developed by EASA is included after the Motor Repair form.

B. Expanded work scope

If tests and inspection indicate problems beyond the initial scope of the listed repair, then the designated person shall be contacted and given a description of the problems, plus an estimate of their effect on delivery and costs.

C. File

The repairer will keep a copy of the Motor Repair Form and the Repairer's Tracking Form in the file for the particular job.

2.02 INCOMING INSPECTION

On receipt of the motor and after reading the Motor Repair Form, the repairer shall do the initial tests set out below, plus any other tests indicated by the form.

A. Intent

The intent of the initial tests shall be to determine and record the probable cause of failure, if any, to document certain pre-repair parameters, and to determine what work is required.

B. Visual

A visual inspection shall be made to assess the general condition of the outside of the motor for cracks, broken welds, and missing parts.

C. Insulation to Ground

An insulation resistance test to ground shall be performed, at a voltage suitable for the motor's voltage rating and the apparent condition of the motor. The testing shall be as follows:

1) The initial test voltage shall be 500 volts DC.

2) For motors where there is more than one winding, the insulation shall also be tested between windings, at the test voltage appropriate to the lower voltage winding, with other windings grounded.

3) The duration of the insulation test shall be one minute. The temperature shall be recorded.

D. Bearings

The shaft shall be manually rotated to check for any obvious problems with the bearings or shaft.

E. No Load Run

If possible, the motor shall be run on no load, at nameplate voltage and checked for balanced currents and vibration. The readings shall be noted on the Repairer's Tracking Form.

2.03 DISMANTLING

A. Identify Problem

After the incoming inspection, the motor shall be dismantled to the extent needed to either fully identify or repair the problem, or to do the specified overhaul.

B. Markings

End brackets and frames shall be clearly match-marked with numerals or letters.

C. Parts Storage

Bolts and small parts shall be stored in dedicated containers and parts from other jobs shall not be kept with them.

D. Insulated Bearings

If the motor has insulated bearings, note which, if any have the insulation deliberately bridged. The insulation resistance of each insulated bearing shall be at least 10 megohms with a 500-volt DC test.

E. Dowels

If dowels or fitted bolts are used to ensure accurate fits, the location of these pieces shall be identified.

F. Explosion Proof

Repairer must be certified by UL for repair of explosion-proof motors. For motors certified for hazardous locations, extra care shall be taken to ensure that joints and flame paths are not damaged during the work. If damage requiring other than normal repair is found, purchaser shall be notified before proceeding with repair.

G. Rotor Removal

For horizontal motors where the shaft rotor assembly is too heavy to be removed easily by hand, one or two cranes shall be used to move the shaft, with a close-fitting pipe installed over one end of the shaft to act as a shaft extension. Attention shall be paid to the following:

1) Care shall be taken that the slings do not damage the bearing surfaces or the rotor.

2) Under no circumstances shall the stator windings be touched by any of the parts being moved.

2.04 VERTICAL MOTORS

Vertical motors shall be dismantled according to the manufacturer's instruction book. The assembly of vertical motors is critical. Particular attention shall be paid to, and records kept of:

1) The amount of rotor lift (end play);

2) The make and types of bearings, particularly the thrust bearings including orientation of thrust bearings;

3) The arrangement of the thrust and guide bearings, including specially ground mating surfaces;

4) The axial and radial clearances (fit) to the shaft and housing;

5) The method of bearing insulation, if any; and

6) Any other particular features of the motor configuration.

2.05 WINDING REMOVAL

A. General

For motors that are to be rewound, the core shall be stripped, cleaned, tested and repaired.

B. Take data

Winding data shall be recorded so as to permit replicating original configuration.

C. Core Loss

A core loss test shall be done on all stators both before and after stripping and iron repair, to check for damaged interlaminar insulation. The tests shall be done at a flux density of 85,000 lines per square inch rms. Exciting current and watts loss shall be recorded each time, as well as a physical check carried out for hot spots. If data from previous tests are available, the results shall be compared. Testing at other flux densities may be done if previous data is available.

If hot spots exceed 15°C above the average temperature after 10 minutes, or losses are excessive overall either before or after stripping, the situation shall be discussed with the purchaser before proceeding further. For a core without any hot spots, the losses after stripping shall not be more than 10% higher than the pre-strip losses. To avoid misleading results, the second core loss test should not be done until the core has been cleaned and dried.

D. Burn Out

The winding shall be burned out in a controlled temperature burnout oven where the part temperature is limited by means of fuel control and supplementary (water spray) cooling to 360°C (680°F) for organic (C3) or 400°C (750°F) for inorganic (C5) interlaminar insulation. If a higher temperature is deemed necessary, repairer shall reference communication or documentation from the motor manufacturer indicating that the core iron can safely withstand the temperature.

E. Aluminum Frame

Frames may be chemically stripped if burnout facilities are not available. Other methods of stripping may only be used with purchaser approval.

2.06 CORE PREPARATION

A. Cleaning

The stripped core shall be cleaned of all foreign material, such as insulation debris, and dried.

B. Iron Damage

All obvious iron damage, plus any problems indicated by the core loss tests, and significant frame damage, shall be reported to the purchaser before proceeding further.

C. Method of Repair

The method of repair to damaged cores shall be discussed with purchaser and shall be chosen from the following:

1) Grinding. Selective grinding with a small sharp power tool.

2) Spray between laminates. Separating laminations and reinsulating with spray-on inter laminar insulation.

3) Mica between laminations. Inserting split mica between the laminations.

4) Restacking. Restacking, with deburred laminations and new interlaminar insulation.

D. Core Loss Test

A final core loss test shall be done as described in sub-section 2.05.C.

2.07 REWINDS

A. Winding Details

The total cross-sectional area of a turn, the turns per coil, the span and connection of the coils shall not be changed without authorization from the purchaser.

B. Thermal Class

Class F or higher system materials shall be used throughout. Windings which were originally Class H shall be replaced with a Class H rewind.

C. Sensors

Temperature sensing devices shall be replaced with devices comparable to those previously used.

D. Explosion Proof

If the temperature class of the insulation of an explosion-proof motor has been increased, a temperature sensor shall be installed to monitor and limit the motor surface temperature to the original maximum external temperature. The motor shall be tagged with a warning to the operator that to maintain the hazardous area classification, the sensor must be connected to shut down the motor.

E. Insulation Materials

Insulation shall include, as a minimum, the following components:

1) Turn insulation. Multiple build coating turn insulation of polyamide, polyimide or a combination of both over polyester, or equivalent;

2) Slot Liner. Slot liner extending at least one quarter inch past each end of the slot;

3) Separator. Center strip or separator between the top and bottom coil sides in a slot;

4) Wedge. A top piece to hold the coils in the slot (where needed, a bottom filling piece shall be used to make up any extra space in the slot); and,

5) Phase Barriers. Phase barriers between end turns of different phases (these shall be trimmed to permit clear airflow).

F. End Turns

The end turns shall be fully compacted so that there are no loose wires. Both sets of end turns, plus leads and jumpers, shall be laced tightly together so that each coil is tied securely to the two adjacent coils.

G. Connections

All connections shall be brazed with materials that will not be subject to corrosion in the specified operating environment. They shall have no sharp edges and shall be insulated.

H. Winding Test

Before impregnation, the winding shall be tested to verify that there are no wrong connections or shorted turns. This may include a surge comparison test, a high potential test, and winding resistance test. Voltage used shall be as indicated in EASA Recommended Practices for the Repair of Rotating Electrical Apparatus or other standards approved by purchaser. Any defects shall be corrected and retested before impregnating. Test results shall be recorded in the Repairer's Tracking Form.

I. Impregnation

The rewound stator shall be impregnated in one of the following ways:

1) Dip-and-Bake. Double dip-and-bake cycle using resin or varnish and a temperature-controlled bake oven (baking times and temperatures shall be recorded in the Repairer's Tracking Form).

2) Trickle. A trickle epoxy or polyester treatment where the resin is poured into the end turns and slots of a vertically inclined stator, which has been heated with controlled electric current to assist in curing the resin.

3) VPI. Vacuum Pressure Impregnation (VPI) treatment.

2.08 ROUTINE OVERHAULS

A. Testing

1) Winding and cooling ducts shall be cleaned, dried and inspected.

2) Winding insulation resistance shall be tested at 500 volts DC

3) The duration of the test shall be one minute. The minimum acceptable level after one minute, corrected to a 40°C reference temperature per IEEE 43, is 20 megohms. Levels less than 20 megohms shall be discussed with the purchaser.

4) If satisfactory levels are not attained, the winding shall be recleaned and dried thoroughly at a temperature not exceeding 90°C (195°F), and then retested.

5) After successful insulation resistance to ground has been achieved, the winding shall be given a high potential or surge comparison test. Voltage level used shall be as indicated in EASA Recommended Practice for the Repair of Rotating Electrical Apparatus or other standards approved by purchaser.

B. Cleaning

The components, including the stator windings, shall be cleaned with hot water and a suitable detergent after heavy deposits of dirt and grease have been removed by scraping and wiping.

If necessary, brushes shall be used to clean small passages in components.

Solvents shall not be used to clean insulation but may be used on mechanical components of the motor.

All components shall be thoroughly dried at a temperature less than 90°C (195°F), for as long as it takes to remove all signs of moisture. For windings, this will be indicated by the insulation resistance stabilizing after some hours of drying.

C. Repairs

After satisfactory insulation resistance has been attained, all loose or damaged wedges, slot sticks, coil supports etc., shall be replaced or repaired.

The winding shall then be given a dip-and-bake using a Class F or higher-grade varnish. Immersion and baking times shall be sufficient to penetrate any cracks and give a sealed durable finish to the insulation. The repairer shall notify the purchaser if a dip-and-bake is undesirable.

D. Other

The routine overhaul of other parts of the motor shall return the parts to good condition.

E. Reassembly

The assembly of the motor after overhaul is covered in sub-section 2.15.

2.09 ROTOR TEST AND REPAIR

A. Testing

All rotors shall be given a test for damaged bars, whether the motor is suspect in this area or not. This test shall apply a stable single-phase voltage to the stator of the assembled motor while the shaft is slowly turned through at least one revolution. Any fluctuations of stator current in excess of 3 percent shall be investigated further.

Other methods may be used if the stator winding is faulty and it can be shown that they have a good record of detecting faults.

For motors where electrical or mechanical problems with the rotor are suspected, more sophisticated tests shall be used. These include one or more of the following:

1) Growler tests;

2) Current analysis or vibration analysis of a loaded motor;

3) Physical examination;

4) Ultrasonic examination of the bars and end rings; and,

5) Core loss tests (axial current thorough shaft)

B. Fabricated Cage Repair

Since repair of squirrel cages can be expensive, no work shall be done in this area without purchaser approval.

C. Cage Replacement

For cage replacement, the conductive, metallurgical and strength characteristics of both the bar and end ring materials shall be determined and duplicated. Since changing the rotor resistance or density has major effects on the motor performance, no change in these is permitted without purchaser approval.

Any parts that are to be reused shall be cleaned and examined for defects.

D. Testing

After fabrication, the joints shall be examined and tested by ultrasonic or comparable means.

E. Balance

The rotor shall be dynamically balanced to the tolerances listed in sub-section 2.14 of these specifications.

F. Cast Rotor Repair

A defective cast cage shall not be repaired without prior authorization from the purchaser.

The method of repair shall be to remove the old cage by chemical means, without damaging the laminations, followed by rebarring with extruded, aluminum bars and duplicate cast aluminum end rings to give the same cage resistance as before.

G. Iron Repairs

Because of the costs involved, this work shall not be done without prior purchaser approval. If tests or observation indicate that the laminations have been damaged, they shall be repaired or replaced with new laminations. Care shall be taken to ensure a consistent air gap.

2.10 SHAFT REPAIR

A. General

If information on the Motor Repair Form or any tests indicate that there may be a shaft problem, it shall be tested and repaired or replaced. If there is any risk or uncertainty in the proposed repair method, this shall be discussed with the purchaser prior to proceeding

B. Requirements

When the work is completed, the shaft shall meet the following criteria:

1) Total Indicated Runout. It shall be straight, with a Total Indicated Runout (TIR) when measured in V blocks, of no more than 0.051 mm (0.002 inch) for up to 41.3 mm (1.625 inch) shaft diameter and no more than 0.003 inch for larger diameters.

2) No Cracks. The shaft shall have no cracks. If ultrasonic, magnetic particle, dye penetrant or other testing methods are needed to verify this, they shall be documented in repair records.

3) Straightness. The shaft shall be straight, parallel and undamaged at the bearing areas. If any measurable but acceptable deviation from this is noted, it shall be documented in repair records.

4) Journal Repairs. Make journal repairs by welding or plating, followed by machining and grinding, with fit as specified in section 2.11.D.

5) Fit To Rotor. The shaft shall be a tight fit to the rotor iron. If there is looseness, the shaft shall be built up and turned for proper interference fit, or shall be replaced.

6) Shaft Material. New shafts shall be machined from AISI Gr. C1045 hot rolled steel or better. For special applications, the service center shall consult with the manufacturer and report recommendations to purchaser.

7) Tolerances. Shaft extension dimension tolerances shall be within the limits specified in NEMA MG-1, Motors and Generators sections.

2.11 ANTI-FRICTION BEARINGS

A. New bearing

Anti-friction bearings shall always be replaced. New bearings shall be the same type as originally used, unless otherwise approved by the purchaser. If the bearing type, size, sealing, shielding or configuration is changed, this shall be noted on a supplemental nameplate. If the original bearing race showed pitting from shaft current, the causes and remedy for this shall be discussed with purchaser.

B. Shielding, Sealing

If the method of shielding, sealing, or lubricating is to be changed, it shall be approved by the purchaser.

C. Clearance

Unless otherwise specified by the manufacturer or purchaser, C3 clearance bearings shall be used for all bearings.

D. Tolerances

Fitting tolerances to the journals and housings shall be per manufacturer's specifications. Out of tolerance fits shall be restored. (Reference ANSI/ABMA Std. 7-1995 as a guide).

E. Heating

The bearing shall be heated, without use of direct flame, to approximately 94°C (200°F) to permit it to be slid easily onto the shaft up to the shoulder. Bearings with bores under 45mm may be press fit.

F. Grease

Greasable bearings shall be lubricated as specified in the EASA Recommended Practice for the Repair of Rotating Electrical Apparatus or other standards approved by the purchaser.

Lubrication shall be in accordance with the motor manufacturer's recommendations if available. Otherwise fill the cavity to 1/3 capacity. The lubricant shall be compatible with both the customer's lubricant and the lubricant packed by the bearing manufacturer.

G. Insulated Bearings

Insulated bearing resistance shall be at least 10 megohms. Voltage applied from the megohmmeter should not exceed 500 VDC. Alternately a 115VAC test lamp may be used. No light should be visible from the lamp filament. (Reference IEEE 112-1996, section 9.4.3. or EASA AR100-1998).

2.12 END BRACKET

A. Requirements

End brackets shall fit snugly to the stator frame. Worn dowel holes and rabbet fits shall be repaired.

B. Tolerances

See section 2.11.D for the fit of the outer diameter of anti-friction bearings to housings.

C. Repairs

Repairs to end bracket bearing housings shall be by building up the metal and machining to size. Welding, plating, and sleeving are the accepted methods.

Epoxies and other compounds shall not be used for locking bearings.

2.13 OTHER DEVICES

A. Fans

Fans shall be checked for cracks and fit to the shaft or rotor.

Fans shall be firmly fixed to the shaft or rotor by the original factory method, unless there has been corrosion between dissimilar metals, in which case a new method shall be proposed to the purchaser. Welding to the shaft is not permitted.

Repairs to fans shall only be done after discussion with purchaser.

New fans shall be as supplied by the original manufacturer if available.

Fans used in motors for use in hazardous locations shall be made of material that will not cause sparking, either by impact or by buildup of static electricity.

B. Temperature sensors

Temperature sensors shall be installed in the motor as originally found or as otherwise specified by the purchaser.

- Bearing. Bearing sensors shall be of the same type as those removed and shall be located to sense, as nearly as possible, the highest bearing temperature. If the original bearing sensor was insulated, the replacement shall also be insulated.

- Winding. Sensor type shall be the same as the original and will usually be in the end turns.

C. Leads

Leads shall be flexible and multistranded and have at least the same cross sectional area as the original leads. Temperature class must be the same as original or better.

Main power and accessory leads shall be indelibly marked using the same marking systems as the incoming motor. If this is illegible, then the system described in NEMA MG-1, Motors and Generators, Section 2 shall be used and a notice describing the system attached to the terminal box. Every effort shall be made to keep the original direction of rotation.

Lugs, if used, shall be suited for the application, and have all cable strands in the lug. No cable strands may be cut off or bent back to facilitate insertion in the lug.

If crimp lugs are used, the correct make and style of die shall be used for the particular lug, and the correct compression applied

D. Terminal Boxes

Terminal boxes shall be returned to original condition. In particular, the following items must be confirmed.

• Missing bolts and gaskets for both the cover and the motor-to-box joint shall be replaced.

• On motors certified for hazardous environments, the junction boxes shall be sealed off from the main body of the motor by a sealing compound approved by UL for this application.

• Damaged flanges shall be repaired. No paint or gaskets shall be left on the flanges of boxes for explosion-proof motors.

E. Space Heaters

Space heaters shall be tested for insulation resistance for one minute at 500 volts. A 10 megohm minimum resistance is acceptable.

They shall be tested for correct functioning.

F. Vibration Sensors

Vibration sensors shall be replaced in their original locations.

2.14 BALANCING

The motor rotor shall be dynamically balanced in a balance stand before assembly of the motor. Balance criteria include the following:

• Half key. It shall be balanced with a half key in the keyway.

• Tolerance G2.5 (ISO 1940-1). Generally, the permitted total imbalance is 15W/N/2 = oz in/plane where W is weight of rotor in pounds and N is operating speed in RPM. (426 W/N/2 gm. in/plane)

• Tolerance G1.0 (ISO 1940-1). Two Pole rotors should be balanced to 6W/n/2 = oz.in./plane. (170.4 W/n/2 gm. in/plane)

2.15 REASSEMBLY

The assembly of the motor is the reverse of the disassembly process and the following points shall be observed:

1) Match marks shall line up.

2) On reinsertion of the rotor, take care not to damage the journals or the stator windings. Cranes, slings and extension pipes shall be used on heavy rotors. Check axial alignment of stator and rotor cores.

3) Dowels and fitted bolts shall go back into the same holes that they came from.

4) Where they can be measured, all air gaps shall be within 10 percent of the average.

5) On motors with insulated bearings, the insulation shall be checked and noted. (See 2.11.G)

6) On vertical motors, the lift on the shaft shall be the same as the original manufacturer's setting, unless purchaser and the repairer agree that a modified setting would give better performance.

7) Motors for use in hazardous environments shall have all the explosion-proof features maintained and verified in accord with UL674.

A. FINAL TEST

2.16.1 Insulation

Prior to running, the motor shall be given an insulation resistance test to ground in the following manner:

For rewound motors, a DC high potential test shall be conducted at 1700 VDC for motors to be powered by less than 250VAC service voltage. Motors to be powered between 250VAC and 600VAC service voltage shall be tested at 1700VDC plus 3.4 times the machine's voltage

rating, e.g. 3264VDC for a 460VAC machine. Readings corrected to 40°C, which are less than 20 megohms, shall be discussed with purchaser.

2.16.2 Routing test

After the insulation tests, the motor shall be run at no load at full terminal voltage, with either a half key or a half coupling, on the shaft. If the motor uses an external oil supply and removal system in normal use, a similar system shall be arranged for the test. The test shall determine that:

1) No Load Amps. No load current unbalance at balanced rated voltage shall be less than 2 percent.

2) Vibration. Horizontal, vertical, and axial readings shall be taken at each bearing and results recorded for purchaser's review. Tolerance shall not exceed EASA Recommended Practices, Table 4-5, or another standard provided by purchaser.

3) Temperature Rise. Temperature rises after levels stabilize shall be within normal limits on the frame and bearings.

4) Shipment At the completion of the test, the motor shall be painted as specified by the purchaser and prepared for shipment. Any lubricant and coolant inlets and outlets shall be plugged and masked before painting and shipping. Any special precautions or preparations that should be noted before powering the motor shall be indicated on a tag.

PART 3 - EXECUTION

3.01 MEASURING INSTRUMENTS

A. Calibration

All measuring instruments shall be calibrated regularly. The calibration records shall be available for purchaser inspection. Minimum frequency of calibration shall be annually, except:

• Insulation Testers. Insulation resistance testers—every six months to a known resistance;

• Dimension Meters. Micrometers, vernier calipers and other dimension measuring devices—every six months against a minimum grade AA gauge block set; and,

• Bore Gauges. Bore gauges shall be calibrated to a certified standard before and after each use.

B. Storage

All measuring equipment shall be stored in a clean dry environment.

3.02 MATERIALS

A. Anti-friction bearing

Anti-friction bearings shall be replaced. They shall be the same type as originally used, unless otherwise specified by purchaser.

Bearings shall be stored in their factory packaging in a clean, dry, location. The location shall be isolated from any vibration strong enough to be felt by hand.

B. Solid insulation

Insulating materials such as slot liners, tapes and phase insulation shall meet or exceed the temperature class of the motor and shall be compatible with the resins used.

Specifications for the materials shall be obtained from the material supplier and kept for checking their suitability for the application.

The materials shall be stored in a clean, dry location. Material such as B stage tape that degrades with time at room temperature, shall be kept refrigerated.

C. Resins and Varnishes

The manufacturer's material specifications for resins and varnishes shall be kept on file, to permit checking for correct storage, handling, and usage.

A sample shall have been taken and analyzed to be satisfactory within three months of its being used on a motor.

D. Other Materials

Other materials shall be new and of good quality. The following shall be confirmed:

- Lead Wires. Lead wires shall be multi-stranded and flexible with insulation meeting or exceeding the temperature and voltage class of the motor.
- Magnet Wire. Magnet wire for random-wound motors shall be compatible with the other insulation system components and shall be insulated with a polyamide, polyimide or a combination of both, over a polyester base coat, or equivalent. Any wire damaged in storage or working shall be replaced. The manufacturer's specifications for the insulation shall be kept on file for reference. Inverter grade wire shall be used on any motor that purchaser advises is powered by a pulse-width modulated inverter.

3.03 TEST AND INSPECTION

A. Records

Records shall be kept of all tests and inspections carried out during the work. Signed copies of these records shall be shipped in original form, at the same time as the motor, to the designated contact person.

B. Access

Purchaser shall always have access to the repair facilities that work is being done, for the purposes of checking progress and inspecting the work.

3.04 FINAL INSPECTION AND TEST

For all motors over 200 HP, or when purchaser specifies, purchaser shall be informed when the final inspection and testing of the motor is to take place. Purchaser shall have the right to be present for tests on any motors.

In emergency cases, tests will not be held up waiting for purchaser representatives, but every effort shall be made to keep purchaser informed so that they can be present if possible.

All final inspection and test results shall be sent, in their original form, to the designated contact person.

END OF SECTION 16090

SECTION 331113 - WATER DISTRIBUTION PIPING

PART 1 - GENERAL

1.1 SUMMARY

A. Section Includes:

1. Pipe and fittings for public line, including potable water line, fire water line, and water main.
2. Tapping sleeves and valves.
3. Valves and fire hydrants.
4. Underground pipe markers.
5. Pipe support systems.
6. Bedding and cover materials.

B. Related Requirements:

1. Section 312316 - Excavation: Product and execution requirements for excavation and backfill required by this Section.
2. Section 312317 - Trenching: Execution requirements for trenching required by this Section.
3. Section 331216 - Water Distribution Valves: Valves and valve boxes for fire hydrant and water main installation.
4. Section 331300 - Disinfecting of Water Utility Distribution: Disinfection of water piping.

1.2 UNIT PRICE - MEASUREMENT AND PAYMENT

A. Measurement and Payment information for all bid items is found in Section 012000 – Price and Payment Procedures.

1.3 REFERENCE STANDARDS

A. American Association of State Highway and Transportation Officials:

1. AASHTO T 180 - Standard Method of Test for Moisture-Density Relations of Soils Using a 4.54-kg (10-lb) Rammer and a 457-mm (18-in.) Drop.

B. American Society of Mechanical Engineers:

1. ASME B16.1 - Gray Iron Pipe Flanges and Flanged Fittings: Classes 25, 125, and 250.

C. ASTM International:

1. ASTM A36 - Standard Specification for Carbon Structural Steel.

2. ASTM A123 - Standard Specification for Zinc (Hot-Dip Galvanized) Coatings on Iron and Steel Products.
3. ASTM A307 - Standard Specification for Carbon Steel Bolts, Studs, and Threaded Rod 60 000 PSI Tensile Strength.
4. ASTM D698 - Standard Test Methods for Laboratory Compaction Characteristics of Soil Using Standard Effort (12 400 ft-lbf/ft3 (600 kN-m/m3).
5. ASTM D1557 - Standard Test Methods for Laboratory Compaction Characteristics of Soil Using Modified Effort (56,000 ft-lbf/ft3 (2,700 kN-m/m3).
6. ASTM D1785 - Standard Specification for PolyVinyl Chloride (PVC) Plastic Pipe, Schedules 40, 80, and 120.
7. ASTM D2241 - Standard Specification for PolyVinyl Chloride (PVC) Pressure-Rated Pipe (SDR Series).
8. ASTM D3035 - Standard Specification for Polyethylene (PE) Plastic Pipe (DR-PR) Based on Controlled Outside Diameter.
9. ASTM D3139 - Standard Specification for Joints for Plastic Pressure Pipes Using Flexible Elastomeric Seals.
10. ASTM D6938 - Standard Test Method for In-Place Density and Water Content of Soil and Soil-Aggregate by Nuclear Methods (Shallow Depth).
11. ASTM F477 - Standard Specification for Elastomeric Seals (Gaskets) for Joining Plastic Pipe.

D. American Water Works Association:

1. AWWA C104 - Cement-Mortar Lining for Ductile-Iron Pipe and Fittings.
2. AWWA C105 - Polyethylene Encasement for Ductile-Iron Pipe Systems.
3. AWWA C110 - Ductile-Iron and Gray-Iron Fittings.
4. AWWA C111 - Rubber-Gasket Joints for Ductile-Iron Pressure Pipe and Fittings.
5. AWWA C115 - Flanged Ductile-Iron Pipe with Ductile-Iron or Gray-Iron Threaded Flanges.
6. AWWA C151 - Ductile-Iron Pipe, Centrifugally Cast.
7. AWWA C153 - Ductile-Iron Compact Fittings.
8. AWWA C200 - Steel Water Pipe, 6 In. (150 mm) and Larger.
9. AWWA C203 - Coal-Tar Protective Coatings and Linings for Steel Water Pipelines - Enamel and Tape - Hot-Applied.
10. AWWA C205 - Cement-Mortar Protective Lining and Coating for Steel Water Pipe - 4 In. (100 mm) and Larger - Shop Applied.
11. AWWA C206 - Field Welding of Steel Water Pipe.
12. AWWA C207 - Steel Pipe Flanges for Waterworks Service - Sizes 4 In. Through 144 In. (100 mm Through 3,600 mm).
13. AWWA C208 - Dimensions for Fabricated Steel Water Pipe Fittings.
14. AWWA C213 - Fusion-Bonded Epoxy Coating for the Interior and Exterior of Steel Water Pipelines.
15. AWWA C300 - Reinforced Concrete Pressure Pipe, Steel-Cylinder Type.
16. AWWA C301 – Pre-stressed Concrete Pressure Pipe, Steel-Cylinder Type.
17. AWWA C500 - Metal-Seated Gate Valves for Water Supply Service.
18. AWWA C600 - Installation of Ductile-Iron Mains and Their Appurtenances.
19. AWWA C605 - Underground Installation of Polyvinyl Chloride (PVC) Pressure Pipe and Fittings for Water.
20. AWWA C606 - Grooved and Shouldered Joints.
21. AWWA C700 - Cold-Water Meters - Displacement Type, Bronze Main Case.
22. AWWA C701 - Cold-Water Meters - Turbine Type, for Customer Service.
23. AWWA C702 - Cold-Water Meters - Compound Type.

24. AWWA C706 - Direct-Reading, Remote-Registration Systems for Cold-Water Meters.
25. AWWA C900 - Polyvinyl Chloride (PVC) Pressure Pipe and Fabricated Fittings, 4 In. Through 12 In. (100 mm Through 300 mm), for Water Transmission and Distribution.
26. AWWA C901 - Polyethylene (PE) Pressure Pipe and Tubing, 1/2 In. (13 mm) Through 3 In.(76 mm), for Water Service.
27. AWWA C905 - Polyvinyl Chloride (PVC) Pressure Pipe and Fabricated Fittings, 14 In. Through 48 In. (350 mm Through 1,200 mm) for Water Transmission and Distribution.
28. AWWA M6 - Water Meters - Selection, Installation, Testing, and Maintenance.

E. Manufacturers Standardization Society of the Valve and Fittings Industry:

1. MSS SP-60 - Connecting Flange Joints between Tapping Sleeves and Tapping Valves.

F. National Fire Protection Association:

1. NFPA 24 - Standard for the Installation of Private Fire Service Mains and Their Appurtenances.

1.4 SUBMITTALS

A. Section 013300 - Submittal Procedures: Requirements for submittals.

B. Product Data: Submit data on pipe materials, pipe fittings, valves, hydrants, meters, meter boxes, tapping sleeves and accessories.

C. Field Quality-Control Submittals: Indicate results of Contractor-furnished tests and inspections.

1.5 CLOSEOUT SUBMITTALS

A. Section 017000 - Execution and Closeout Requirements: Requirements for submittals.

B. Project Record Documents: Record actual locations of mains, valves, connections, thrust restraints, and invert elevations.

C. Identify and describe unexpected variations to subsoil conditions or discovery of uncharted utilities.

1.6 QUALITY ASSURANCE

A. Valves: Mark valve body with manufacturer's name and pressure rating.

1.7 DELIVERY, STORAGE, AND HANDLING

A. Section 016000 - Product Requirements: Requirements for transporting, handling, storing, and protecting products.

B. Deliver and store valves in shipping containers with manufacturer's labeling in place and inspect for damage.

C. Block individual and stockpiled pipe lengths to prevent moving.

D. Do not place pipe or pipe materials on private property or in areas obstructing pedestrian or vehicle traffic.

E. Store polyethylene and PVC materials out of sunlight.

1.8 EXISTING CONDITIONS

A. Field Measurements:

1. Verify field measurements prior to fabrication.
2. Indicate field measurements on Shop Drawings.

PART 2 - PRODUCTS

2.1 WATER PIPING

A. Ductile-Iron Pipe:

1. Comply with AWWA C151.
2. Exterior Coatings
   a. Underground service: Bituminous Outside Coating: Comply with AWWA C151.
   b. Above ground service:
      1) Shop Primed by Manufacturer/Fabricator.
         a) Surface Prep: SSPC-SP6 or NACE #3 Commercial blast standard near color black.
            Primer: Tnemec Series N140 applied at 3 to 5 mils dry.
      2) Field Applied Coating by Contractor.
         a) Surface Prep: Clean & Dry prior to painting.
         b) 1st Coat: Tnemec Series 135 applied at 3 mils dry.
         c) 2nd Coat: Tnemec Series 73U applied at 3 mils dry.
         d) Color to be selected by Owner.

3. Pipe Mortar Lining:

   a. Comply with AWWA C104.

4. Pipe Class:

   a. Comply with AWWA C151.

b. Pressure Class 350 for pipe diameter 3" through 12". Pressure Class 250 for pipe diameter greater than 12".

5. Fittings:

a. Material: Ductile iron, Class 350.
b. Compact Fittings: Comply with AWWA C153.
c. Exterior Coating for underground service:

1) Bituminous Coating: Comply with AWWA C110.
d. Lining
1) Cement Mortar Lining: Comply with AWWA C104.

e. Exterior Coating for Above ground service
1) Shop Primed by Manufacturer/Fabricator.
a) Surface Prep: SSPC-SP6 or NACE #3 Commercial blast standard near color black.
b) Primer: Tnemec Series N140 applied at 3 to 5 mils dry.
2) Field Applied Coating by Contractor.
a) Surface Prep: Clean & Dry prior to painting.
b) 1st Coat: Tnemec Series 135 applied at 3 mils dry.
c) 2nd Coat: Tnemec Series 73U applied at 3 mils dry.
d) Color to be selected by Owner.

6. Joints:

a. Mechanical and Push-on Joints: Comply with AWWA C111.
b. Flanged Joints: Comply with AWWA C115.
c. Restrained Joints: Boltless, push-on type, joint restraint independent of joint seal.

B. PVC (4" diameter and larger):

1. Comply with AWWA C900 and AWWA C905, Class 235.
2. Fittings:
a. Material: Ductile iron, Class 350.
b. Compact Fittings: Comply with AWWA C153.
c. Coating and Lining:

1) Bituminous Coating: Comply with AWWA C110.
2) Cement Mortar Lining: Comply with AWWA C104.

3. Joints:

a. Comply with ASTM D3139 and ASTM F477.
b. Seals: PVC flexible elastomeric
c. Solvent-cement couplings are not permitted.

2.2 TAPPING SLEEVES AND VALVES

A. Tapping Sleeves:

1. Manufacturers:

   a. Mueller, JCM, and Ford.
   b. Substitutions: As specified in Section 016000 - Product Requirements.

2. Description:

   a. Material: Ductile iron or cast iron.
   b. Type: Dual compression.
   c. Outlet Flange Dimensions and Drilling: Comply with ANSI B16.1, Class 125 and MSS SP-60.
   d. Certified ANSI/NSF 61.
   e. 4”-12” 250 psig working pressure; 14”-24” 200 psig working pressure.

B. Tapping Valves:

1. Manufacturers:

   a. Mueller, M&H, AVK.
   b. Substitutions: As specified in Section 016000 - Product Requirements.

2. Description:

   a. Comply with AWWA C515.
   b. Type: Resilient wedge with non-rising stem.
   c. Inlet Flanges: Comply with ANSI B16.1, Class 125 and MSS SP-60.
   d. Mechanical Joint Outlets: Comply with AWWA C111.

3. Mark manufacturer's name and pressure rating on valve body.

2.3 VALVES AND FIRE HYDRANTS

A. Valves: As specified in Section 331216 - Water Distribution Valves.

B. Fire Hydrants: As specified in Section 331219 - Water Distribution Fire Hydrants.

2.4 UNDERGROUND PIPE MARKERS

A. Plastic Ribbon Warning Tape:

1. Brightly colored blue to indicate potable water, continuously printed.
2. Minimum 6 inches wide by 4 mil thick.
3. Manufactured for direct burial service.

B. Tracer Wire:

1. Electronic detection materials for nonconductive piping products.
2. Unshielded, 10 AWG, THWN-insulated copper wire.

2.5 PIPE SUPPORTS AND ANCHORING

A. Metal for Pipe Support Brackets: Structural steel, thoroughly coated with bituminous paint.

B. Metal Tie Rods and Clamps or Lugs: Galvanized steel sized according to NFPA 24, thoroughly coated with bituminous paint.

2.6 ACCESSORIES

A. Steel Rods, Bolt, Lugs, and Brackets:

1. Comply with ASTM A36 or ASTM A307.
2. Grade A carbon steel.

B. Protective Coating: Bituminous.

PART 3 - EXECUTION

3.1 EXAMINATION

A. Section 017000 - Execution and Closeout Requirements: Requirements for installation examination.

B. Verify that existing utility water main size, location, and invert are as indicated on Drawings.

3.2 PREPARATION

A. Section 017000 - Execution and Closeout Requirements: Requirements for installation preparation.

B. Preconstruction Site Photos:

1. Take photographs along centerline of proposed pipe trench; minimum one photograph for each 50 feet of pipe trench.
2. Show mailboxes, curbing, lawns, driveways, signs, culverts, and other existing Site features.
3. Include Project description, date taken, and sequential number on back of each photograph.

C. Pipe Cutting:

1. Cut pipe ends square, ream pipe and tube ends to full pipe diameter, and remove burrs.
2. Use only equipment specifically designed for pipe cutting; use of chisels or hand saws is not permitted.
3. Grind edges smooth with beveled end for push-on connections.

D. Remove scale and dirt on inside and outside before assembly.

E. Prepare pipe connections to equipment with flanges or unions.

3.3 INSTALLATION

A. Bedding:

1. Excavation:

   a. Excavate pipe trench as specified in Section 312317 - Trenching for Work of this Section.
   b. Hand trim excavation for accurate placement of pipe to elevations as indicated on Drawings.

2. Dewater excavations to maintain dry conditions and to preserve final grades at bottom of excavation.
3. Provide sheeting and shoring as specified in Section 312317 - Trenching.
4. Place bedding material at trench bottom, level fill materials in one continuous layer not exceeding 6 inches compacted depth, and compact to 95 percent of maximum density.

B. Piping:

1. Install pipe according to AWWA C600 or AWWA C605, as applicable.
2. Handle and assemble pipe according to manufacturer instructions and as indicated on Drawings.
3. Steel Rods, Bolt, Lugs, and Brackets: Coat buried steel with one coat of coal tar coating before backfilling.
4. Maintain 10 feet horizontal separation of water main from sewer piping and install water main a minimum of 18” above sewer at all perpendicular crossings in accordance with Georgia EPD minimum standards.
5. Install ductile-iron piping and fittings according to AWWA C600.
6. Weld pipe according to AWWA C206, and weld joints according to AWWA C205.
7. Flanged Joints: Not to be used in underground installations except within structures.
8. Route pipe in straight line; re-lay pipe that is out of alignment or grade.
9. High Points:

   a. Install pipe with no high points.
   b. If unforeseen field conditions arise that necessitate high points, install air release valves as directed by Engineer.

10. Bearing:

   a. Install pipe to have bearing along entire length of pipe.

b. Excavate bell holes to permit proper joint installation.
c. Do not lay pipe in wet or frozen trench.

11. Prevent foreign material from entering pipe during placement.
12. Install pipe to allow for expansion and contraction without stressing pipe or joints.
13. Close pipe openings with watertight plugs during Work stoppages.
14. Install access fittings to permit disinfection of water system performed under Section 331300 - Disinfecting of Water Utility Distribution.
15. Cover:

    a. Establish elevations of buried piping with not less than 3 feet of cover or 4 feet of cover where installed within Georgia Department of Transportation right of way.
    b. Measure depth of cover from final surface grade to top of pipe barrel.

16. Pipe Markers:

    a. Install tracer wire continuous buried 6 inches below finish grade, above piping and plastic ribbon warning tape buried 6 inches above piping.
    b. Coordinate with trench Work as specified in Section 312317 - Trenching.

C. Valves and Hydrants:

1. Install valves as specified in Section 331216 - Water Utility Distribution Valves.
2. Install hydrants as specified in Section 331219 - Water Utility Distribution Fire Hydrants.

D. Tapping Sleeves and Valves:

1. As indicated on Drawings and according to manufacturer instructions.

E. Polyethylene Encasement:

1. Encase piping in polyethylene where indicated on Drawings to prevent contact with surrounding backfill material.
2. Comply with AWWA C105.
3. Terminate encasement 3 to 6 inches above ground where pipe is exposed.

F. Thrust Restraints:

1. Provide valves, tees, bends, caps, and plugs with concrete thrust blocks.
2. Pour concrete thrust blocks against undisturbed earth.
3. Locate thrust blocks at each elbow or change of pipe direction to resist resultant force and to ensure that pipe and fitting joints will be accessible for repair.
4. Install tie rods, clamps, setscrew retainer glands, or restrained joints.
5. Protect metal-restrained joint components against corrosion by applying a bituminous coating or encasing metal area using concrete mortar.
6. Do not encase pipe and fitting joints to flanges.
7. Install thrust blocks, tie rods, and joint restraint at dead ends of water main.

G. Backfilling:

1. Backfill around sides and to top of pipe with cover fill in minimum lifts of 6 inches, tamp in place, and compact to 95 percent of maximum density.
2. Place and compact material immediately adjacent to pipes to avoid damage to pipe and prevent pipe misalignment.
3. Maintain optimum moisture content of bedding material to attain required compaction density.

H. Disinfection of Potable Water Piping System:

1. As specified in Section 331300 - Disinfecting of Water Utility Distribution.

3.4 TOLERANCES

A. Section 014000 - Quality Requirements: Requirements for tolerances.

B. Install pipe to indicated elevation within tolerance of 3 inches.

3.5 FIELD QUALITY CONTROL

A. Section 017000 - Execution and Closeout Requirements: Field inspecting, testing, adjusting, and balancing.

B. Pressure test system according to AWWA C600 and following:

1. Test Pressure: Not less than 200 psig or 50 psi in excess of maximum static pressure, whichever is greater.
2. Conduct hydrostatic test for at least two hours.
3. Slowly fill section to be tested with water and expel air from piping at high points.
4. Install corporation cocks at high points.
5. Close air vents and corporation cocks after air is expelled.
6. Raise pressure to specified test pressure.
7. Observe joints, fittings, and valves under test.
8. Remove and replace cracked pipes, joints, fittings, and valves that show visible leakage and retest.
9. Correct visible deficiencies and continue testing at same test pressure for additional two hours to determine leakage rate, maintaining test pressure within plus or minus 5.0 psi.
10. Leakage is defined as quantity of water supplied to piping as necessary to maintain test pressure during testing period.
11. Compute maximum allowable leakage using following formula:

    a. $L = SD \times \text{sqrt}(P)/C$

        1) L = testing allowance, gph
        2) S = length of pipe tested, feet
        3) D = nominal diameter of pipe, inches
        4) P = average test pressure during hydrostatic test, psig
        5) C = 148,000

b. If pipe under test contains sections of various diameters, calculate allowable leakage from sum of computed leakage for each size.

12. If test of pipe indicates leakage greater than that allowed, locate source of leakage, make corrections, and retest until leakage is within allowable limits.
13. Correct visible leaks regardless of quantity of leakage.

C. Compaction Testing for Bedding: Comply with Section 312317 - Trenching.

D. Frequency of Compaction Tests: Comply with Section 312317 - Trenching.

END OF SECTION 331113

Copyright 2014 ARCOM

SECTION 331216 - WATER DISTRIBUTION VALVES

PART 1 - GENERAL

1.1 SUMMARY

A. Section Includes:

1. Valves.
2. Valve boxes.

B. Related Requirements:

1. Section 033000 - Cast-in-Place Concrete: Concrete for thrust restraints.
2. Section 331113 - Water Distribution: Piping trenching, backfilling, and compaction requirements.
3. Section 331300 - Disinfecting of Water Utility Distribution: Flushing and disinfection requirements.

1.2 UNIT PRICE - MEASUREMENT AND PAYMENT

A. Measurement and Payment information for all bid items is found in Section 012000 – Price and Payment Procedures.

1.3 REFERENCE STANDARDS

A. American Water Works Association:
1. AWWA C509 - Resilient-Seated Gate Valves for Water Supply Service.
2. AWWA C515 – Reduced-Wall, Resilient Seated Gate Valves for Water Supply Service.
3. AWWA C550 - Protecting Interior Coatings for Valves and Hydrants.
4. AWWA C600 - Installation of Ductile-Iron Mains and Their Appurtenances.

B. NSF International:

1. NSF 61 - Drinking Water System Components - Health Effects.
2. NSF 372 - Drinking Water System Components - Lead Content.

1.4 SUBMITTALS

A. Section 013300 - Submittal Procedures: Requirements for submittals.

B. Product Data: Submit manufacturer's latest published literature. Include illustrations, installation and maintenance instructions, and parts lists.

C. Shop Drawings: Submit description of proposed installation.

D. Manufacturer Instructions: Submit detailed instructions on installation requirements, including storage and handling procedures.

E. Field Quality-Control Submittals: Indicate results of Contractor-furnished tests and inspections.

1.5 CLOSEOUT SUBMITTALS

A. Section 017000 - Execution and Closeout Requirements: Requirements for submittals.

B. Project Record Documents: Record actual locations of valves.

C. Operation and Maintenance Data: Submit information for valves.

1.6 MAINTENANCE MATERIAL SUBMITTALS

A. Section 017000 - Execution and Closeout Requirements: Requirements for maintenance materials.

1.7 QUALITY ASSURANCE

A. Cast manufacturer's name, pressure rating, and year of fabrication into valve body.

1.8 QUALIFICATIONS

A. Manufacturer: Company specializing in manufacturing products specified in this Section with minimum ten years' experience.

1.9 DELIVERY, STORAGE, AND HANDLING

A. Section 016000 - Product Requirements: Requirements for transporting, handling, storing, and protecting products.

B. Prepare valves and accessories for shipment according to applicable AWWA standards.

C. Seal valve and ends to prevent entry of foreign matter.

D. Inspection: Accept materials on Site in manufacturer's original packaging and inspect for damage.

E. Storage:

1. Store materials in areas protected from weather, moisture, or other potential damage.
2. Do not store materials directly on ground.

F. Handle products carefully to prevent damage to interior or exterior surfaces.

PART 2 - PRODUCTS

2.1 RESILIENT WEDGE GATE VALVES

A. Manufacturers:

1. Mueller, M&H, AVK, or approved equal.
2. Substitutions: As specified in Section 016000 - Product Requirements.

B. Description:

1. Comply with AWWA C509 or AWWA C515.
2. Materials:

    a. Body: Ductile iron or cast iron.

3. Seats: Resilient.
4. Stem:

    a. Type: Non-rising.
    b. Material: Bronze.

5. Operation:
    a. Square operating nut for buried service.
    b. Hand-wheel operator for above ground installations.
    c. Open counterclockwise unless otherwise indicated.

6. End Connections: Flanged for above ground service and mechanical joint for buried service.
7. Coatings:

    a. Comply with AWWA C550.
    b. Interior and exterior.

8. Pressure Rating:

    a. 12-inch Diameter and Smaller: 200 psig.
    b. 16-inch Diameter and Larger: 150 psig.

2.2 VALVE BOXES

A. Manufacturers:

1. Mueller, Ford, or approved equal.
2. Substitutions: As specified in Section 016000 - Product Requirements.

B. Description:

1. 12-inch Diameter Valves and Smaller:

   a. Material: Cast iron.
   b. Type: Two-piece, screw.

2. Valves Larger than 12-inch Diameter:

   a. Material: Cast iron.
   b. Type: Three-piece, screw.
   c. Base: Round.

3. Lid Inscription: WATER.

2.3 CHECK VALVES

A. Manufacturers:

1. Titan Flow Control, Inc., or approved equal.
2. Substitutions: As specified in Section 016000 - Product Requirements.

B. Description:

1. Meets or exceeds performance of Titan model CV 41A – DI, wafer type, dual disc check valve.

2. Comply with AWWA C508.
3. Materials:

   a. Body: Ductile Iron, ASTM A 536, with NSF 61 approved coating.

4. Disc: Stainless Steel with Buna -N seat.

5. End Connections: Flanged – ANSI B16.42.

6. Pressure Rating:

   a. 250 psig working pressure.

PART 3 - EXECUTION

3.1 EXAMINATION

A. Section 017000 - Execution and Closeout Requirements: Requirements for installation examination.

B. Determine exact location and size of valves from Drawings.

C. Verify invert elevations of existing work prior to excavation and installation of valves are as indicated on Drawings.

3.2 PREPARATION

A. Section 017000 - Execution and Closeout Requirements: Requirements for installation preparation.

B. Conduct operations to not interfere with, interrupt, damage, destroy, or endanger integrity of surface or subsurface structures, utilities, and landscape in immediate or adjacent areas.

C. Identify required lines, levels, contours, and datum locations.

D. Locate, identify, and protect utilities to remain from damage.

E. Do not interrupt existing utilities without permission and without making arrangements to provide temporary utility services.

1. Notify Engineer not less than seven days in advance of proposed utility interruption.
2. Do not proceed without written permission from Engineer.

3.3 INSTALLATION

A. Perform trench excavation, backfilling, and compaction as specified in Section 331113 - Water Distribution.

B. Install valves in conjunction with pipe laying.

C. Set valves plumb.

D. Provide buried valves with valve boxes installed flush with finished grade.

1. Flush and disinfect system as specified in Section 331300 - Disinfecting of Water Utility Distribution.

3.4 FIELD QUALITY CONTROL

A. Section 017000 - Execution and Closeout Requirements: Requirements for testing, adjusting, and balancing.

B. Pressure test system according to AWWA C600 and following:

1. Test Pressure: Not less than 200 psig or 50 psi in excess of maximum static pressure, whichever is greater.
2. Conduct hydrostatic test for at least two hours.
3. Slowly fill section to be tested with water and expel air from piping at high points.
4. Install corporation cocks at high points.
5. Close air vents and corporation cocks after air is expelled.
6. Raise pressure to specified test pressure.
7. Observe joints, fittings, and valves under test.
8. Remove and replace cracked pipes, joints, fittings, and valves that show visible leakage and retest.
9. Correct visible deficiencies and continue testing at same test pressure for additional two hours to determine leakage rate, maintaining test pressure within plus or minus 5.0 psi.
10. Leakage is defined as quantity of water supplied to piping as necessary to maintain test pressure during testing period.
11. Compute maximum allowable leakage using following formula:

    a. L = SD x sqrt(P)/C

        1) L = testing allowance, gph
        2) S = length of pipe tested, feet
        3) D = nominal diameter of pipe, inches
        4) P = average test pressure during hydrostatic test, psig
        5) C = 148,000

    b. If pipe under test contains sections of various diameters, calculate allowable leakage from sum of computed leakage for each size.

12. If test of pipe indicates leakage greater than that allowed, locate source of leakage, make corrections, and retest until leakage is within allowable limits.
13. Correct visible leaks regardless of quantity of leakage.

END OF SECTION 331216

Copyright 2014 ARCOM

SECTION 331300 - DISINFECTION OF WATER DISTRIBUTION

PART 1 - GENERAL

1.1 SUMMARY

A. Section Includes:

1. Disinfection of potable water distribution system.
2. Testing and reporting of results.

B. Related Requirements:
1. Section 331116 - Water Distribution Piping: Product and execution requirements for installation and testing of site domestic water distribution piping.

1.2 UNIT PRICE - MEASUREMENT AND PAYMENT

A. Measurement and Payment information for all bid items is found in Section 012000 – Price and Payment Procedures.

1.3 REFERENCE STANDARDS

A. American Water Works Association:

1. AWWA B300 - Hypochlorites.
2. AWWA B302 - Ammonium Sulfate.
3. AWWA B303 - Sodium Chlorite.
4. AWWA C651 - Disinfecting Water Mains.

1.4 SUBMITTALS

A. Section 013300 - Submittal Procedures: Requirements for submittals.

B. Product Data: Submit procedures, proposed chemicals, and treatment levels.

C. Certify that water conforms to quality standards of Georgia Environmental Protection Division.

D. Test and Evaluation Reports: Indicate testing results comparative to specified requirements.

E. Field Quality-Control Submittals: Indicate results of Contractor-furnished tests and inspections.

F. Qualifications Statements:

1. Submit qualifications for water treatment firm and testing firm.

1.5 CLOSEOUT SUBMITTALS

A. Section 017000 - Execution and Closeout Requirements: Requirements for submittals.

B. Disinfection Report:

1. Type and form of disinfectant used.
2. Date and time of disinfectant injection start and time of completion.
3. Test locations.
4. Name of person collecting samples.
5. Initial and 24-hour disinfectant residuals in treated water in ppm for each outlet tested.
6. Date and time of flushing start and completion.
7. Disinfectant residual after flushing in ppm for each outlet tested.

C. Bacteriological Report:

1. Date issued, project name, and testing laboratory name, address, and telephone number.
2. Time and date of water sample collection.
3. Name of person collecting samples.
4. Test locations.
5. Initial and 24-hour disinfectant residuals in ppm for each outlet tested.
6. Coliform bacteria test results for each outlet tested.
7. Submit bacteriologist's signature and authority associated with testing.

1.6 QUALITY ASSURANCE

A. Perform Work according to AWWA C651.

1.7 QUALIFICATIONS

A. Testing Firm: Company specializing in laboratory testing for potable water systems, approved by State of Georgia.

PART 2 - PRODUCTS

2.1 DISINFECTION CHEMICALS

A. Chemicals:

1. Hypochlorite: Comply with AWWA B300.
2. Ammonium Sulfate: Comply with AWWA B302.
3. Sodium Chlorite: Comply with AWWA B303.

PART 3 - EXECUTION

3.1 EXAMINATION

A. Section 017000 - Execution and Closeout Requirements: Requirements for installation examination.

B. Verify that piping system has been cleaned, inspected, and pressure tested.

C. Perform scheduling and disinfecting activity with startup, water pressure testing, adjusting and balancing, and demonstration procedures, including coordination with related systems.

3.2 INSTALLATION

A. Provide and attach required equipment to perform Work of this Section.

B. Perform disinfection of water distribution system and installation of system and pressure testing as specified in Section 331116 - Water Distribution Piping.

C. Inject treatment disinfectant into piping system.

D. Maintain disinfectant in system for 24 hours.

E. Flush, circulate, and clean until required cleanliness is achieved using municipal domestic water.

F. Replace permanent system devices that were removed for disinfection.

3.3 FIELD QUALITY CONTROL

A. Section 017000 - Execution and Closeout Requirements: Requirements for testing, adjusting, and balancing.

B. Disinfection, Flushing, and Sampling:

1. Disinfect pipeline installation according to AWWA C651.
2. Use of liquid chlorine is not permitted.
3. Upon completion of retention period required for disinfection, flush pipeline until chlorine concentration in water leaving pipeline is no higher than that generally prevailing in existing system or is acceptable for domestic use.
4. Disposal:

    a. Legally dispose of chlorinated water.
    b. When chlorinated discharge may cause damage to environment, apply neutralizing chemical to chlorinated water to neutralize chlorine residual remaining in water.

5. After final flushing and before pipeline is connected to existing system or placed in service, employ an approved independent testing laboratory to sample, test, and certify that water quality meets drinking water quality standards of Georgia EPD.

6. Disinfect the existing well after final flushing and before pipeline is connected to existing system or placed in service, employ an approved independent testing laboratory to sample, test, and certify that water quality meets drinking water quality standards of Georgia EPD.

END OF SECTION 331300

Copyright 2014 ARCOM

SECTION 332114 - WATER LUBRICATED VERTICAL TURBINE WELL PUMP

1.1 SUMMARY

A. Section Includes:

1. Pump construction.
2. Column assembly.
3. Discharge head assembly
4. Suction pipe and strainer.
5. Electric motor

B. Related Requirements: NONE

1.2 UNIT PRICE - MEASUREMENT AND PAYMENT

A. Measurement and Payment information for all bid items is found in Section 012000 – Price and Payment Procedures.

1.3 REFERENCE STANDARDS

A. American Petroleum Institute:

1. API 10A - Specification for Cements and Materials for Well Cementing.

B. ASTM International:
1. ASTM A48 – Standard Specification for Gray Iron Castings.
2. ASTM A53 - Standard Specification for Pipe, Steel, Black and Hot-Dipped, Zinc-Coated, Welded and Seamless.
3. ASTM 108 – Standard Specification for Steel Bar, Carbon and Alloy, Cold-Finished.
4. ASTM A193 – Standard Specification for Alloy-Steel and Stainless Steel Bolting for High Temperature or High Pressure Service and Other Special Purpose Applications.
5. ASTM A269 – Standard Specification for Seamless and Welded Austenitic Stainless Steel for General Service.
6. ASTM A536 Standard Specification for Ductile Iron Castings.
7. ASTM A582 – Standard Specification for Free-Machining Stainless Steel Bars.
8. ASTM B148 – Standard Specification for Aluminum-Bronze Sand Castings.
9. ASTM B584 – Standard Specification for Copper Alloy Sand Castings for General Applications.
10. ASTM C150 - Standard Specification for Portland Cement.

C. American Water Works Association:

1. AWWA A100 - Water Wells.
2. AWWA C900 - Polyvinyl Chloride (PVC) Pressure Pipe and Fabricated Fittings, 4 In. Through 12 In. (100 mm Through 300 mm), for Water Transmission and Distribution.

D. National Electrical Manufacturers Association:

1. NEMA MG 1 - Motors and Generators.
2. NEMA 250 - Enclosures for Electrical Equipment (1000 Volts Maximum).

1.4 SEQUENCING

A. Section 011000 - Summary: Requirements for sequencing.

1.5 SUBMITTALS

A. Section 013300 - Submittal Procedures: Requirements for submittals.

B. Product Data: Submit data indicating rated capacities, weights, accessories, electrical nameplate data, and wiring diagrams.

C. Manufacturer's Certificate: Certify that products meet or exceed specified requirements.

D. Manufacturer Instructions: Indicate rigging, assembly, and installation instructions.

E. Field Quality-Control Submittals: Indicate results of Contractor-furnished tests and inspections.

F. Qualifications Statements:

1. Submit qualifications for water well contractor.

1.6 CLOSEOUT SUBMITTALS

A. Section 017000 - Execution and Closeout Requirements: Requirements for submittals.

B. Project Record Documents: Video recording of well inspection.

C. Submit executed certification of well pump after performance testing.

D. Operation and Maintenance Data: Submit equipment manuals.

1.7 QUALITY ASSURANCE

A. Perform Work according to AWWA A100.

B. Perform Work according to all Georgia Department of Natural Resources - Environmental Protection Division standards, specifically including Georgia's Minimum Standards for Public Water Systems, latest edition.

1.8 QUALIFICATIONS

A. Drilling Firm: Company specializing in performing Work of this Section with minimum 10 years' documented experience and licensed in State of Georgia as a water well contractor.

PART 2 - PRODUCTS

2.1 PERFORMANCE AND DESIGN CRITERIA

A. Provide complete vertical turbine pumping system capable of meeting the duty conditions in the following Table for each of the specified locations:

PUMP CHARACTERISTICS	WELL NO. 35
DESIGN FLOW (GPM)	Match existing[1]
DESIGN TOTAL DYNAMIC HEAD (FEET)	Match existing[1]
MINIMUM PUMP EFFICIENCY @ DESIGN PT.	Match existing[1]
MAXIMUM SPEED (RPM)	Match existing[1]
IMPELLER DIAMETER (INCHES)	Match existing[1]
NOMINAL HORSEPOWER	Match existing[1]
POWER SUPPLY (V)	Match existing[1]
MODEL NO.	Match existing[1]
NO. OF STAGES	Match existing[1]

1. Contractor to pull existing pump, get manufacturer name and model number and coordinate with manufacturer to match existing pump performance.

2.2 WELL PUMPS

A. Manufacturers:

1. Goulds or approved equal.

2. Substitutions: As specified in Section 016000 - Product Requirements.

B. Discharge Head:
1. Contractor shall re-use existing pump discharge head. Contractor shall re-build existing stuffing box and blast and re-coat the discharge head with a suitable NSF approved epoxy.
2. ½" NPT drain connection for relief water from stuffing box and water leaking around the packing gland to be collected and piped away from pump foundation.
3. Discharge head diameter: match base of motor.
4. Discharge Size: match existing.
5. Motor drive shaft: match line shaft diameter; ASTM A 582 S41600 stainless steel. Brass adjusting nut meeting ASTM B16 Alloy C36000.
6. Drive shaft/line shaft coupling: ASTM A 582 S41600 stainless steel.
7. Shaft above stuffing box shall be equipped with rubber water slinger to protect the motor.
8. Equipped with pre-lubrication connection.
9. Equipped with properly sized screened air vent to vent the well casing.
10. Equipped with 3/16" minimum diameter continuous stainless steel PVC coated air line for water level measurement.

C. Packed Type Stuffing Box:
1. Deep bore type, cast iron body.
2. Minimum of six (6) rings of packing and a lantern ring.
3. Teflon separator rings between each packing ring to provide uniform pressure on each ring.
4. Grease inlet connection and pressure relief outlet.
5. Packing gland: bronze, split-type secured with ASTM A193/A194 Gr. B8M Type 316 stainless steel studs and nuts.
6. Bronze grease cup.
7. Bearing: bronze, adequate length to prevent shaft deflection through the box and to serve as throttle bushing.
8. Designed to withstand the pressure produced by the pump at shutoff head with maximum diameter impeller.

D. Column Assembly:
1. Screwed or flanged to discharge head.
2. Column pipe: carbon steel pipe meeting ASTM A53, Grade B. Match existing diameter.
3. Ends: machined with eight (8) threads per inch and faced parallel to butt against machined shoulders in the column couplings.
4. Intermediate sections of column shall not exceed ten feet (10').
5. Top and bottom sections of column shall not exceed five feet (5').
6. Bottom and intermediate column pipes: upper ends fitted with 416 SS coupling. Couplings shall have integrally cast spider and hub to hold and accurately align the line shaft bearing. "Drop-in" type of aligning spiders will also be acceptable.
7. Column pipe: O.D. to match existing pump column, 0.36" minimum wall thickness; length adequate to provide a minimum of thirty feet (30') of submergence over the pump bowl after the pump has been operated for eight (8) hours continuously.

E. Line Shaft Bearings:
1. Synthetic rubber, external shape of bearing designed to retain bearing in coupling hub, without use of auxiliary collars or rings.

2. Replacements capable of being installed by hand without special tools.

F. Line Shaft:
1. Ground and polished with surface not to exceed 40 RMS, ASTM A 582 S41600 stainless steel.
2. Diameter: Contractor shall verify prior to ordering and match existing.
3. Intermediate shaft sections: interchangeable, not in excess of ten feet (10') in length.
4. Butting ends: machined square to the axis of the shaft.
5. Faces: recessed to insure proper contact.
6. Shaft ends: threaded and coupled by stainless steel couplings designed with safety factor of 1-1/2 times the shaft rating.
7. Couplings: without vent holes.
8. Sleeves: ASTM A269, S30400 stainless steel; to act as a journal for each rubber line shaft bearing; placed on full size shaft without undercutting, secured in position by a suitable adhesive; replacement sleeves shall permit field installation without special tools.

G. Pump bowl
1. Bowl material: Cast iron.
2. Intermediates and cases shall have bronze (ASTM B584 Alloy C89835) sleeve type bushings to support and guide the shaft.
3. Sand collar of 304 SS protect the suction case bearing from abrasives in pumped liquid.
4. Impellers: enclosed type only; 316 SS, machined, balanced, and filed for maximum efficiency and minimum vibration; securely fastened to the bowl shaft with taper collets of ASTM A 582, S41600 stainless steel.
5. Bowl shaft: diameter sufficient to transmit the pump horsepower with a liberal safety factor and rigidly support the impellers between the bowl and case bearings; material shall be ASTM 582, S41600 stainless steel.

H. Electric Motor:
1. Well No. 35 - Pump motor to be Re-built by Contractor as per Specification Section 160900 for installation by Contractor. Contractor shall utilize Deese Services, contact Tony Deese at 229-535-2942 for rebuilding motors. Prior approval by City staff required for other providers of electrical motor rebuilding services.

I. Pre-lubrication System:
1. Pump shall be provided with a pre-lubrication system consisting of a heavy-duty automatic solenoid operated lubricating device complete with piping, isolating valves, and timers installed at the pump head. Pre- lube system shall be capable of sensing flow and prevent starting of pump if water is not available for pre-lubrication of pump.
2. Suitably sized for the necessary pump column size and anticipated water level.

J. Air Line Water Level Measurement Device:
1. Provide a continuous, PVC-coated stainless-steel air line for water depth measurement with oil filled gages calibrated to read in feet measuring the depth of water surface in well below ground level.

PART 3 - EXECUTION

3.1 EXAMINATION

A. Section 017000 - Execution and Closeout Requirements: Requirements for installation examination.

B. Verify that Site conditions are capable of supporting equipment for performing required installation.

3.2 PREPARATION

A. Section 017000 - Execution and Closeout Requirements: Requirements for installation preparation.

B. Protect structures near well from damage.

3.3 INSTALLATION

A. Pump:
   1. Installation of pump and related accessories shall be in accordance with all manufacturer's recommendations and requirements.

3.4 FIELD QUALITY CONTROL

A. Section 017000 - Execution and Closeout Requirements: Requirements for testing, adjusting, and balancing.

B. Performance Testing:

   1. Notify Engineer at least two weeks prior to flow rate testing.

   2. Contractor shall conduct a flow test for a minimum of eight (8) continuous hours. Discharge flow rate shall not be less than indicated by the published pump curve based on the measured discharge pressure. Flow rate shall not be less than 90% of the specified design flow rate based on flow measurement by an orifice test. Contractor shall provide all test equipment and shall be responsible for disposal of all discharge water.

   3. Vibration Test
      a. Measured using and IRD Model 345 vibration analyzer or equivalent equipment. Background vibration shall first be determined with all equipment at rest. Next, unclutched motor vibration shall be determined. The coupled pump and motor vibration shall then be determined. Measurements shall be made at the top of the motor in the vertical plane and both horizontal planes, parallel and perpendicular to the discharge pipeline.

b. The maximum vibration of the coupled pump and motor at the design point on the curve at RPM shall not exceed those specified by the latest revision of the Hydraulic Institute standards for vertical turbine pumps.
c. Vibration measured shall also be in compliance with NEMA MG-1, latest revision.

4. Contractor shall perform a Rossum Sand Test to document the amount of sand being produced by the well prior to placing it back into service.

END OF SECTION 332114

STILL WATERS

ENGINEERING